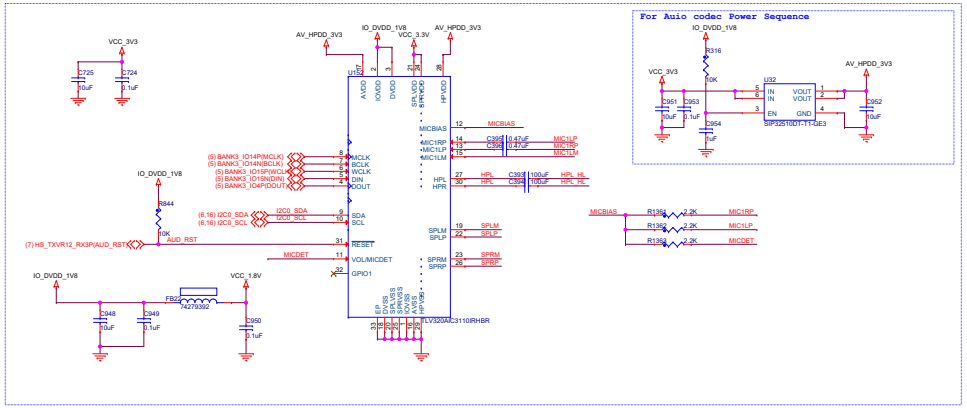
For Auio codec Power Sequence
U152
TLV320AIC3110RHBR
U32
SIP32510DT-T1-GE3
VCC_3V3
AV_HPDD_3V3
IO_DVDD_1V8
VCC_3.3V
VCC_1.8V
MICBIAS
MICDET
AUD_RST
I2C0_SDA
I2C0_SCL
(5) BANK3_IO14P(MCLK)
(5) BANK3_IO14N(BCLK)
(5) BANK3_IO15P(WCLK)
(5) BANK3_IO15N(DIN)
(5) BANK3_IO4P(DOUT)
(7) HS_TX/VR12_RX3P(AUD_RST)
(6,16) I2C0_SDA
(6,16) I2C0_SCL
MIC1RP
MIC1LP
MIC1LM
HPL
HPL_HL
SPLM
SPLP
SPRM
SPRP
MICDET

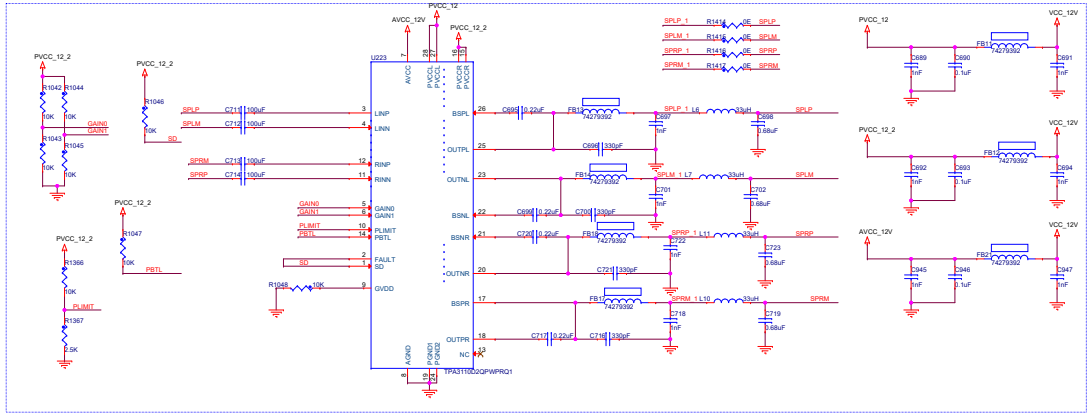
U223
TPA3110D2QPWPRQ1
PVCC_12
AVCC_12V
PVCC_12_2
VCC_12V
AVCC_12V
SPLP
SPLM
SPRP
SPRM
GAIN0
GAIN1
PLIMIT
PBTL
SD
LINP
LINN
RINP
RINN
BSPL
OUTPL
OUTNL
BSNL
BSNR
OUTNR
BSPR
OUTPR
FAULT
GVDD
AVCC
PVCCL
PVCCR
AGND
PGND1
PGND2
FB1
FB2
74279392