REVISION RECORD			
LTR	ECO NO:	APPROVED:	DATE:

PCM3060

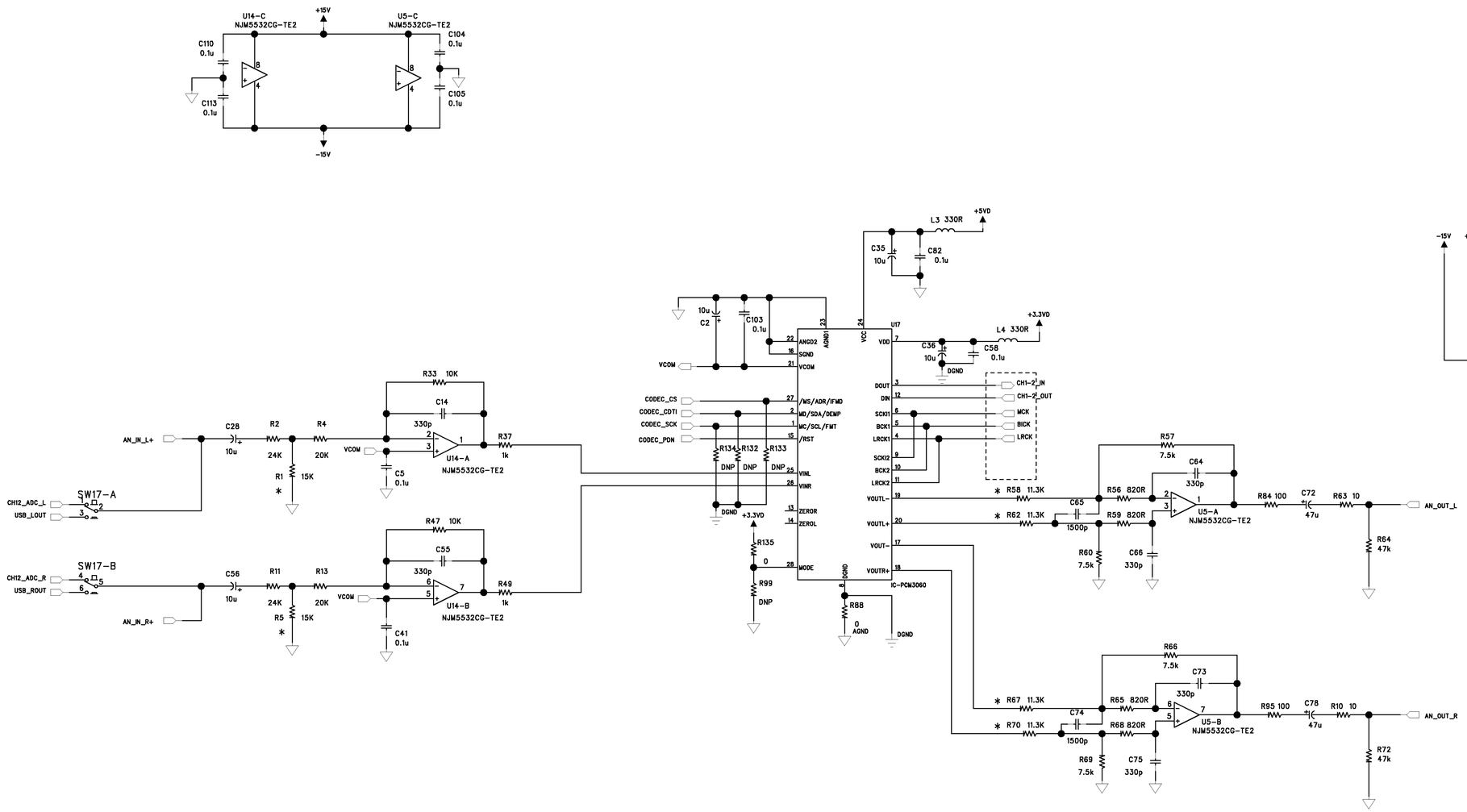

PCM3060 CONFIGURATIONS:

MODE: Stand-Alone

Wordlength: 24-bit

DE-EMPHASIS: 44.1kHz

AUDIO SERIAL FORMAT: I2S

COMPANY: KWANASIA ELECTRONICS LIMITED					
TITLE: BK52&57 USB PCM3060					
DRAWN: <Drawn By>	DATED: 2021-10-27	CODE: <Code>	SIZE: A1	DRAWING NO:	REV: ES1
CHECKED: <Checked By>	DATED: <Checked Date>				
QUALITY CONTROL: <QC By>	DATED: <QC Date>				
RELEASED: <Released By>	DATED: <Release Date>	SCALE: <Scale>		SHEET: 2 OF 3	