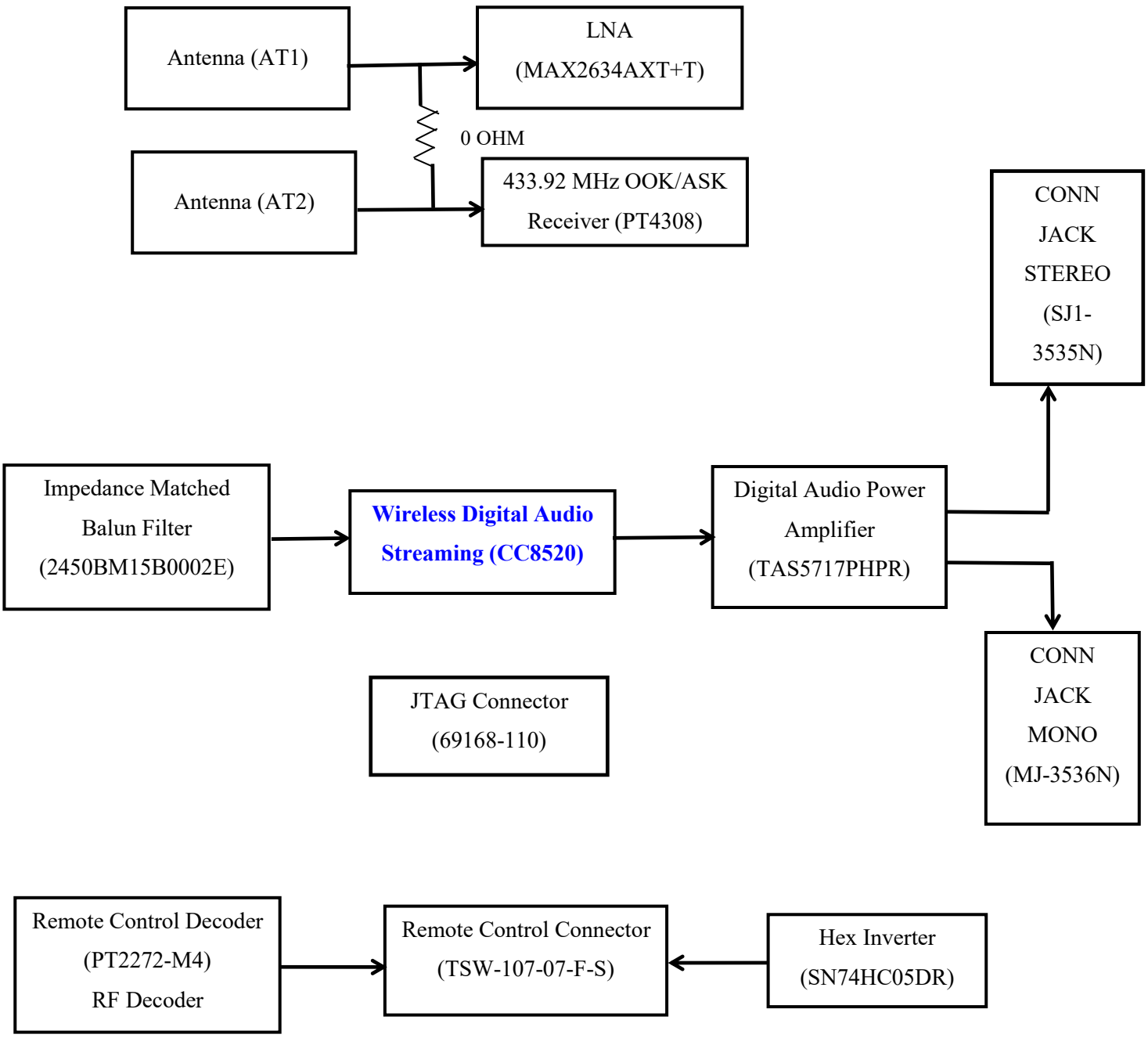
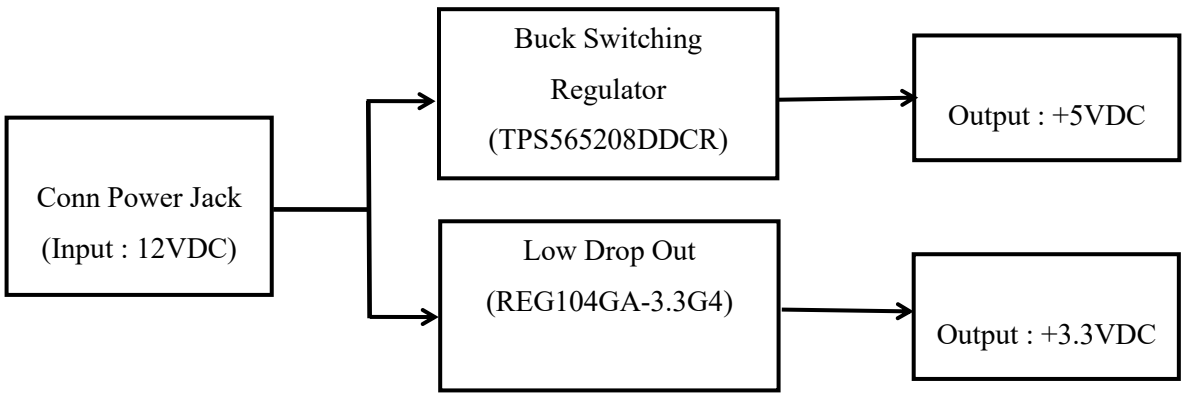
Power Supply Section