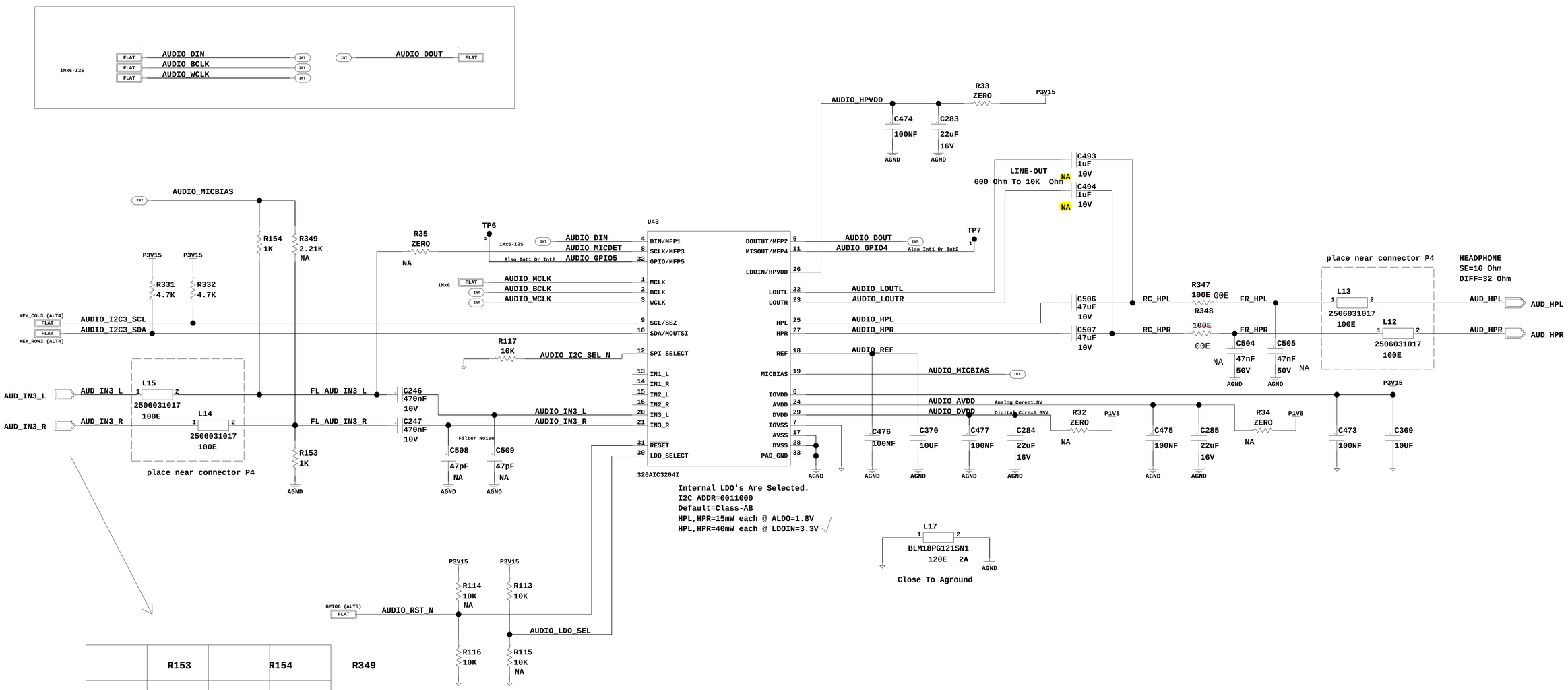

	R153	R154	R349
Electret Mic Mono	0Ohm	2.21kOhm	NA
Electret Mic Stereo	NA	2.21kOhm	2.21kOhm
Electret Mic Diferential	1kOhm	NA	1kOhm
Line Mic Mono	0Ohm	NA	NA
Line Mic Stereo	NA	NA	NA
Line Mic Diferential	NA	NA	NA

AUDIO