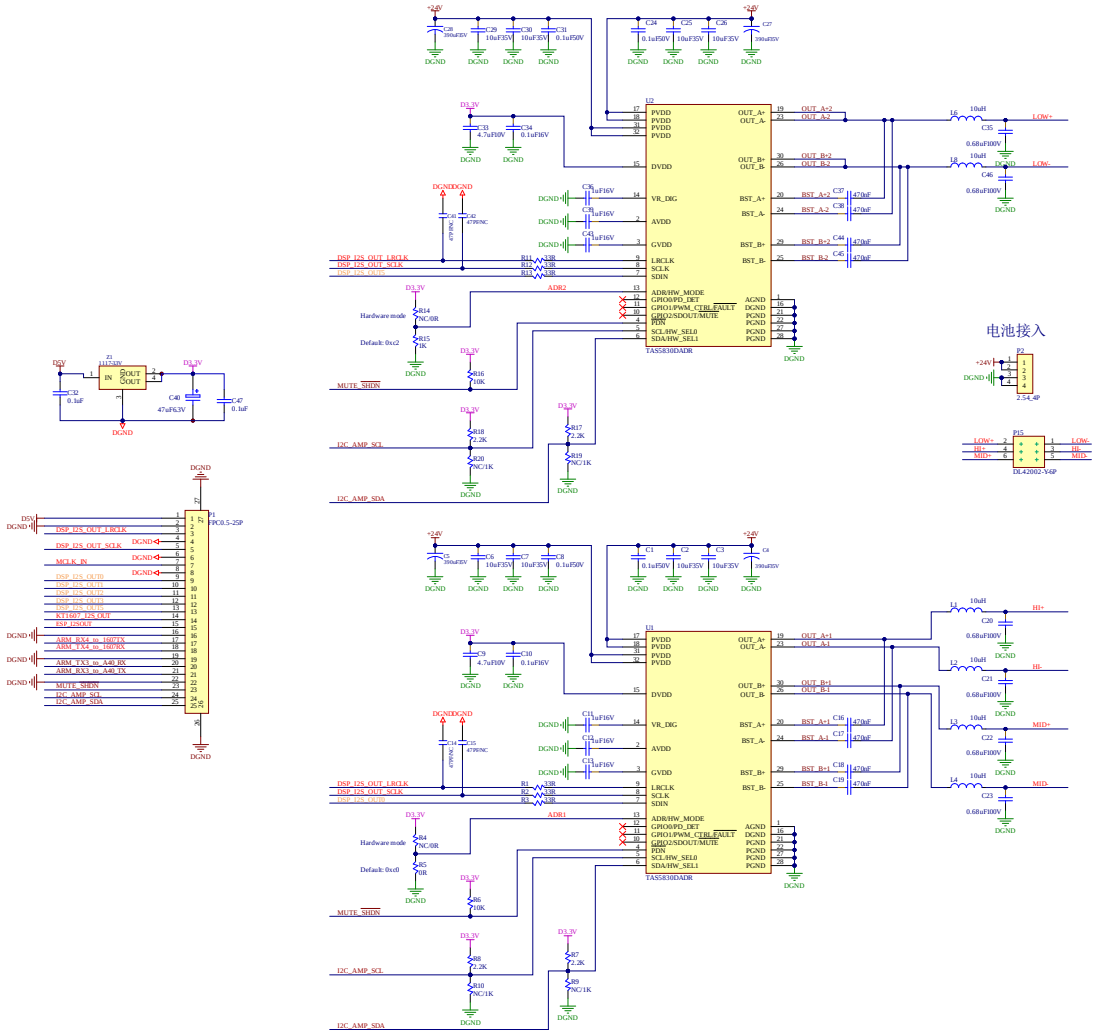
U2
TAS5830DADR
U3
TAS5830DADR
电池接入
P2
2.54_4P
P15
DL42002-V-6P
P1
FPC0.5-25P
J6
Z1
LT1529X
DGND
DGND
DGND

Comment	Description	Designator	Footprint	LibRef	Quantity