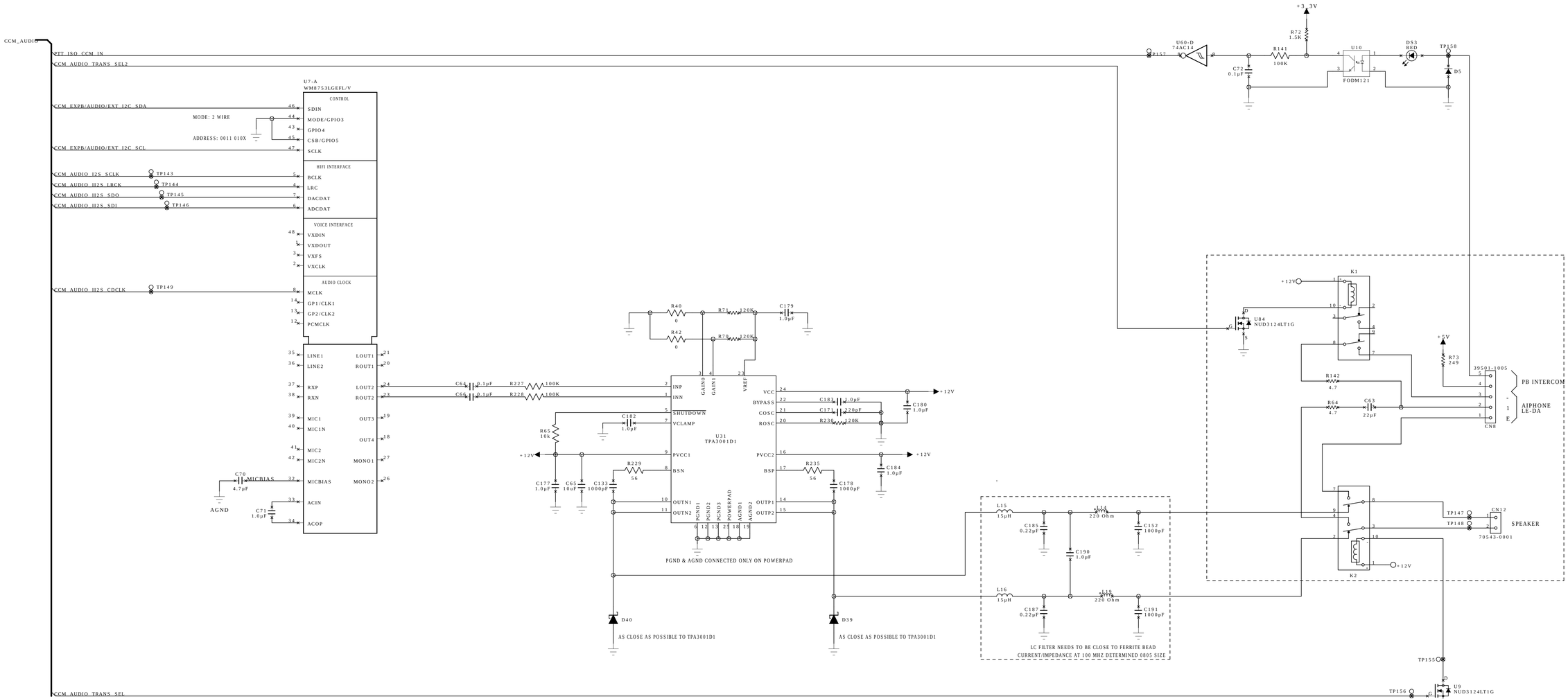

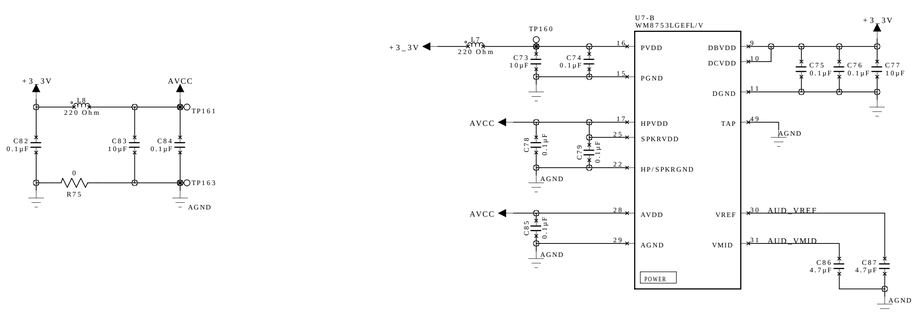

1	17127 11/08:17	PRODUCTION RELEASE	DS	AMANO MCGANN INC.	
0	— 07/31:17	PROTOTYPE	DS	SERIES OPUS	MODEL 2000
SYM	ECN DATE	REVISIONS	SIGN	NOMENCLATURE SCHEMATIC, ICORE - REV: 1	PAGE 1/1
APPROVED ---	CHECKED2 ---	CHECKED1 ---	DESIGNED ---	DRAWN JK	PART NUMBER ATD-118100	DATE 11/8/2017