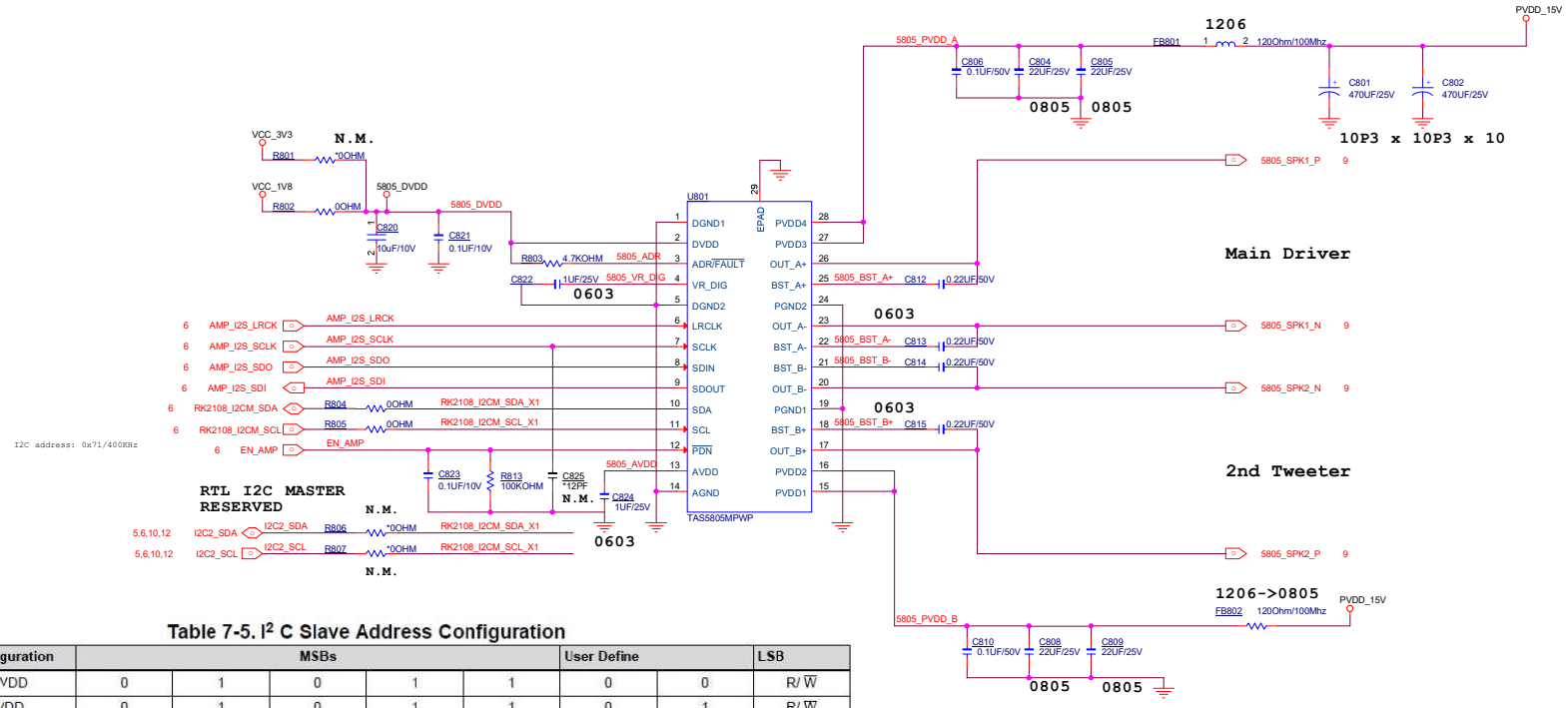

Table 7-5. I² C Slave Address Configuration

ADR PIN Configuration	MSBs					User Define		LSB
4.7k Ω to DVDD	0	1	0	1	1	0	0	R/ $\overline{W}$
15kΩ to DVDD	0	1	0	1	1	0	1	R/ $\overline{W}$
47kΩ to DVDD	0	1	0	1	1	1	0	R/ $\overline{W}$
120kΩ to DVDD	0	1	0	1	1	1	1	R/ $\overline{W}$

LUXSHARE ICT	Project Name: ZAAR	Rev: R00
Title : TAS5805MPWP SPK AMP		
Size: C	Engineer: <OrgAddr1>	
Date: Saturday, July 24, 2021	Sheet 8 of 16	

MIC IN

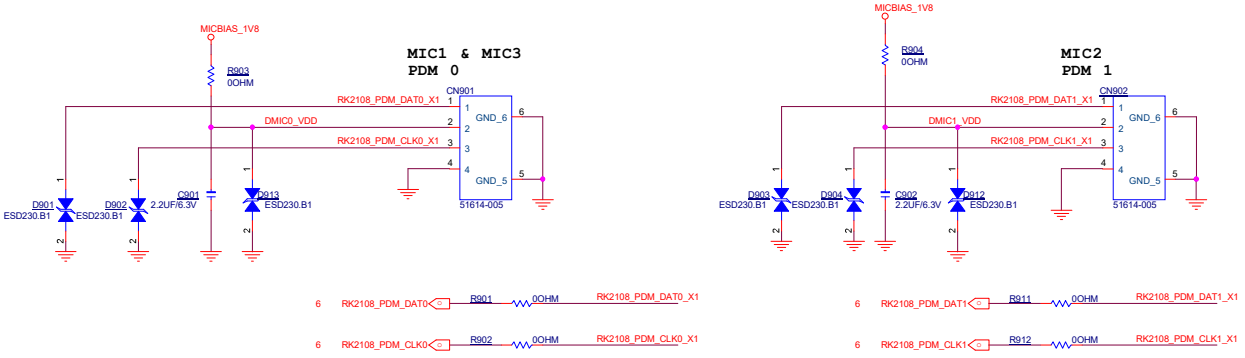

SPEAKER

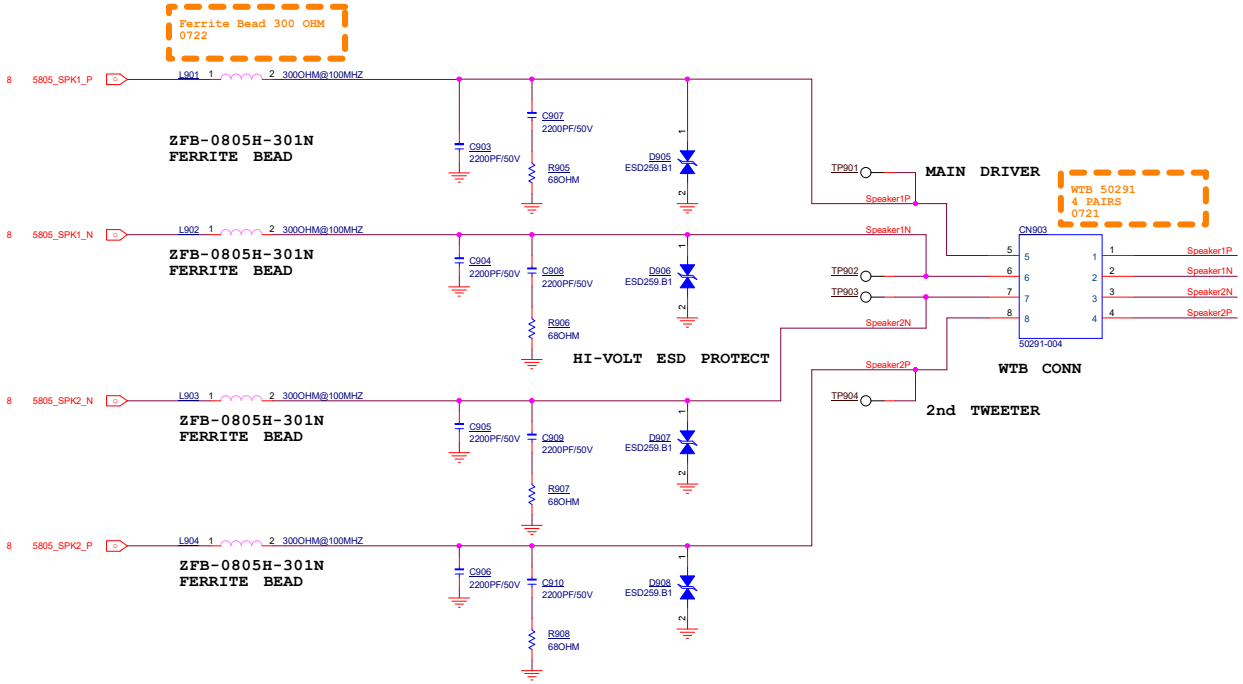

Project Name: ZAAR		Rev R00
Title : AUDIO MIC/SPK		
Size C	<OrgName>	Engineer: <OrgAddr1>
Date: Saturday, July 24, 2021	Sheet 9 of 16	