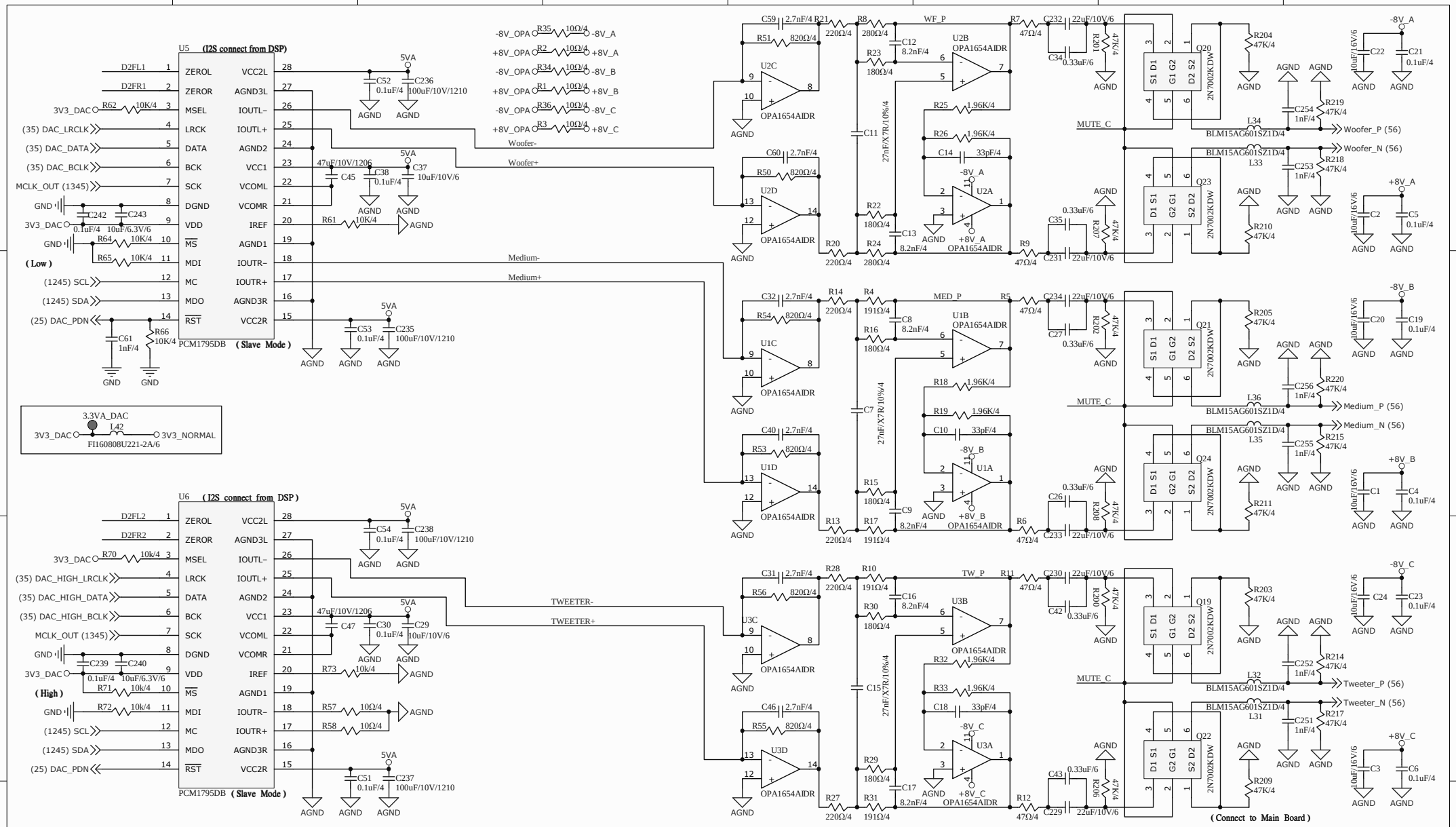

CHANGE DATE	REV	CHANGE INFORMATION	DRAWN BY	CHKD	APPR
2020/07/31	0.1	Initial Release			

APPR

CHKD

淇
淇
JAZZ HIPSTER CORPORATION

SIZE: A3	MX6000 / MAIN-BOARD DAC (AK4490EQ) +OP+CON	REVISION : 0.1
DATE: 2020/07/31	SHEET OF: 5 of 7	
FILE: MX6000	DRAWN BY :	