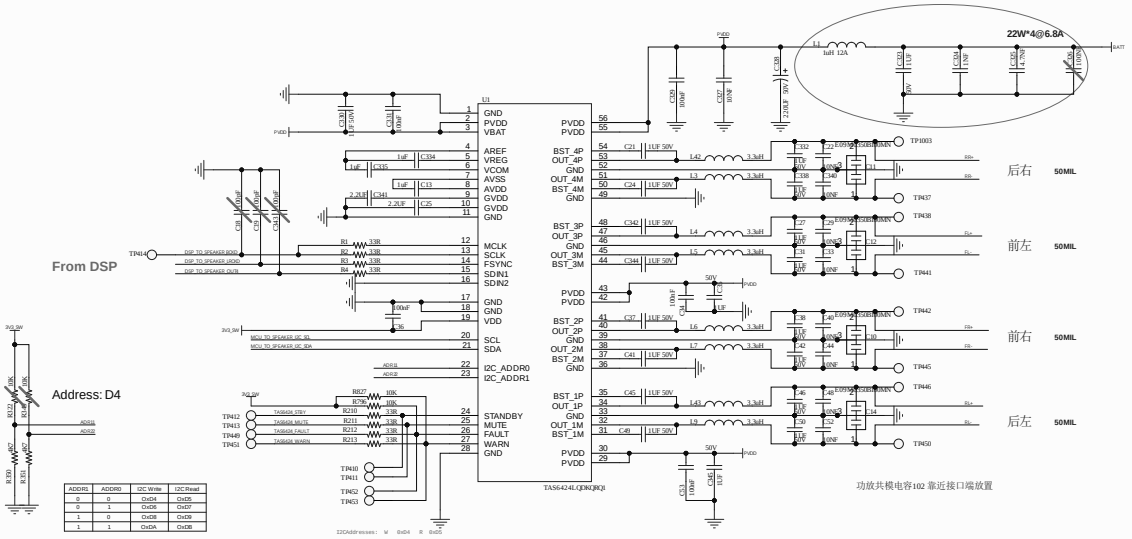

ADDR1	ADDR0	I2C Write	I2C Read
0	0	0xD4	0xD5
0	1	0xD6	0xD7
1	0	0xD8	0xD9
1	1	0xDA	0xDB

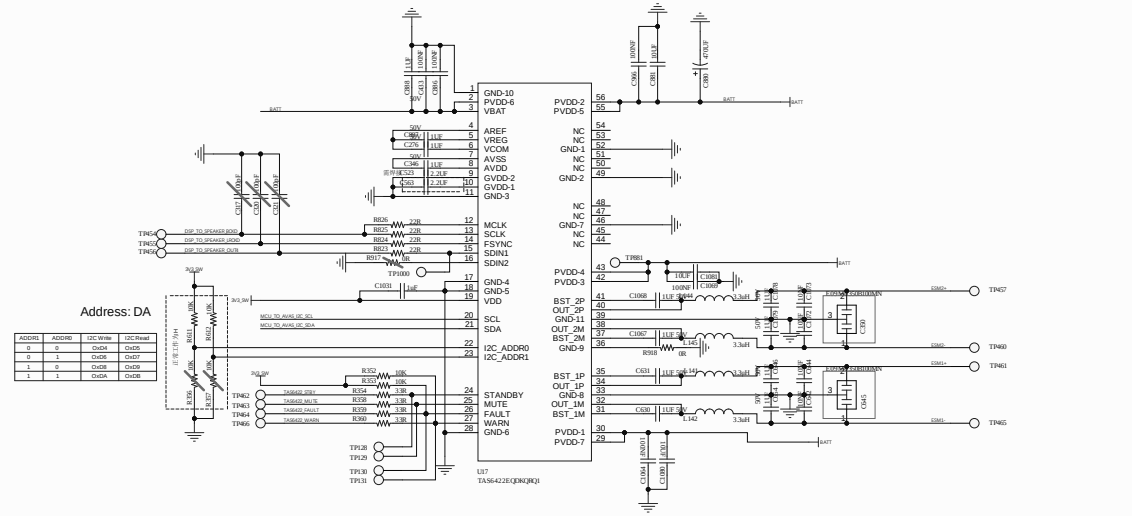

ADDR1	ADDR0	I2C Write	I2C Read
0	0	0xD4	0xD5
0	1	0xD6	0xD7
1	0	0xD8	0xD9
1	1	0xDA	0xDB

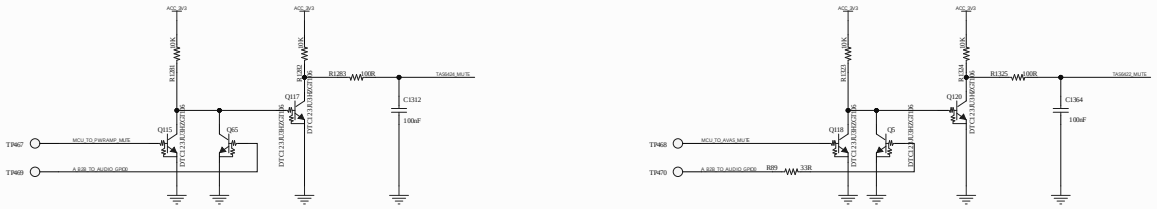

BDSTAR CORPORATION	PROJECT SD3A
	NUMBER ******
SHEET 13 OF 14	DRAWING NAME ***
SIZE A2	DRAWING NUMBER SD3A_MB
CUSTOMER Geely	