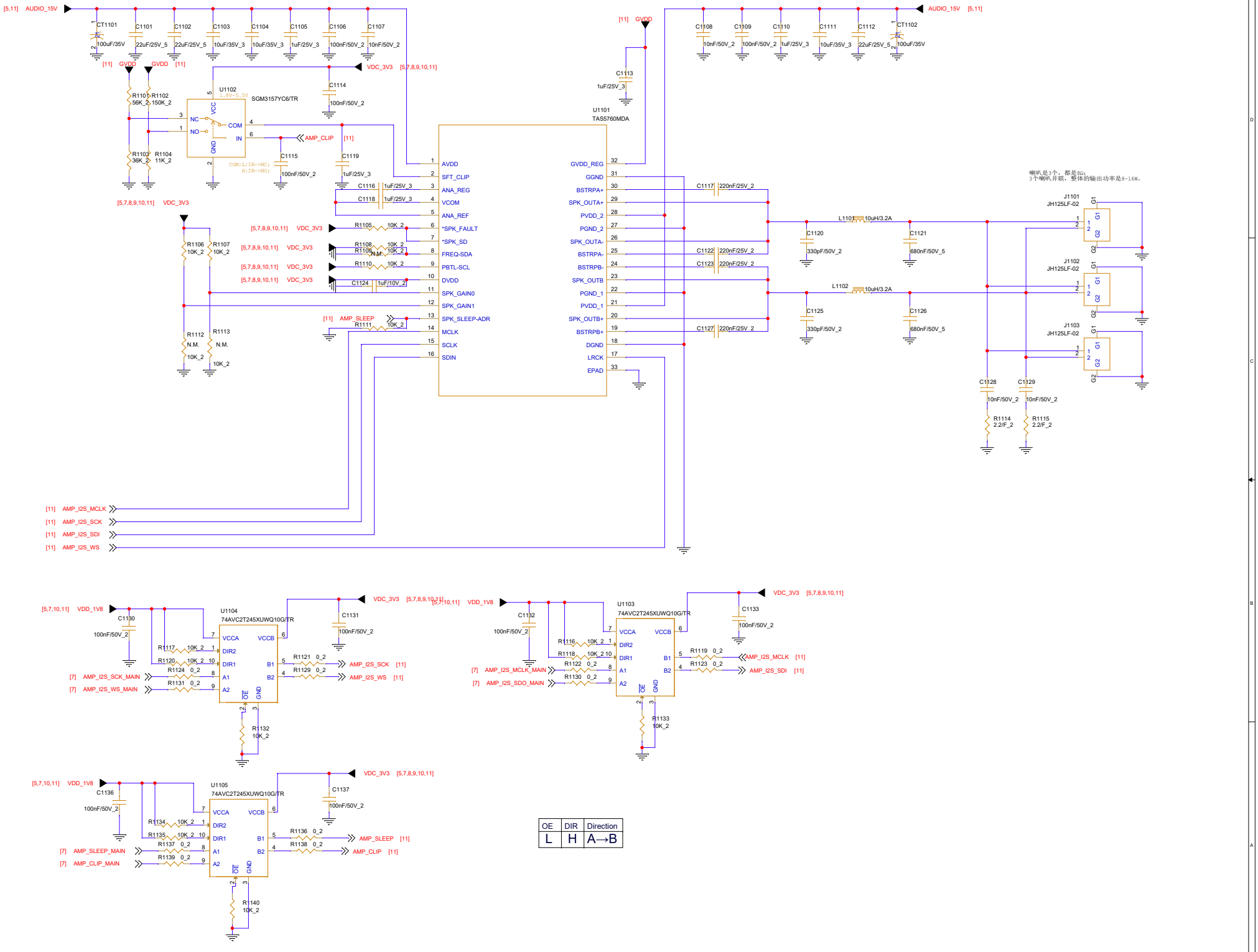

OE	DIR	Direction
L	H	A→B