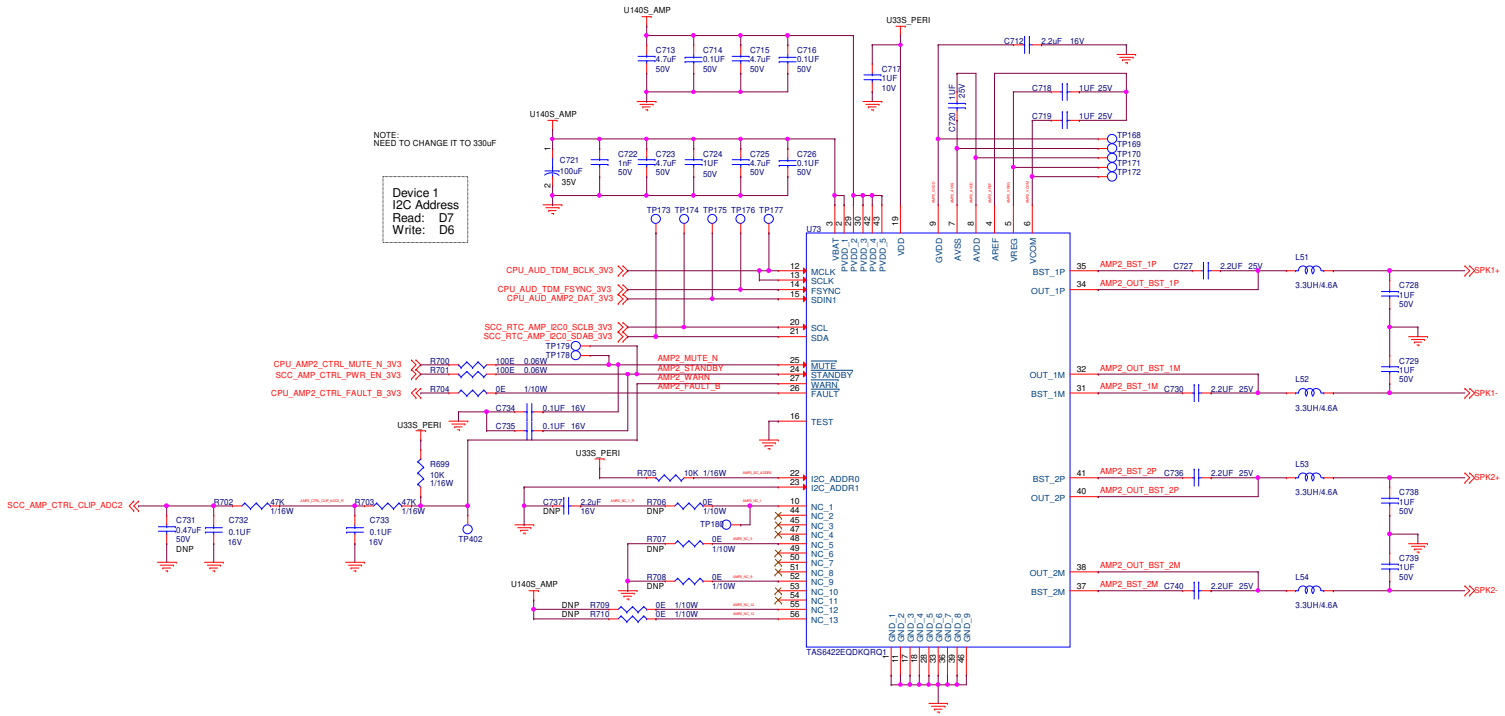# AUDIO - 2 CHANNEL AMP