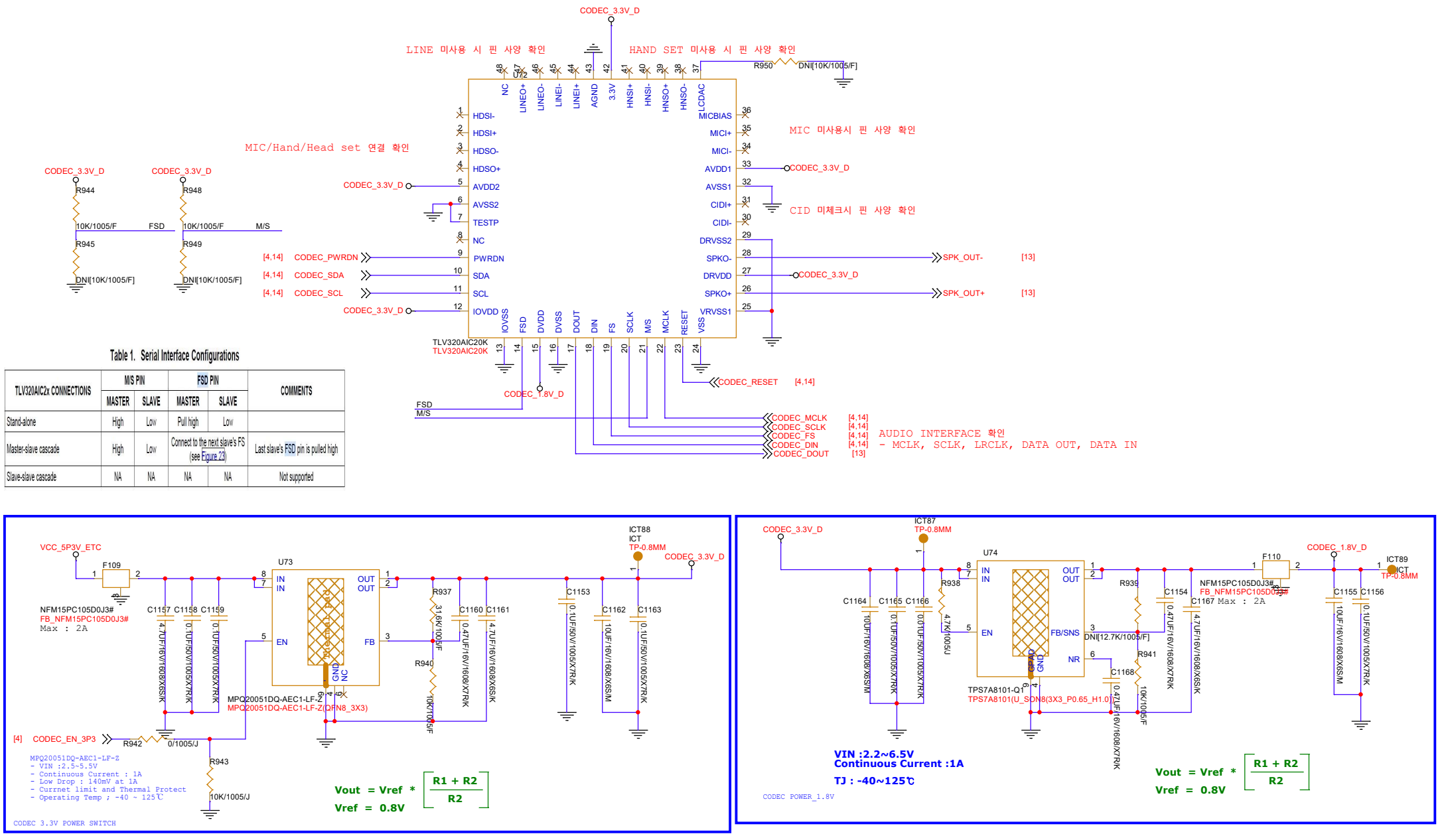


Table 1. Serial Interface Configurations
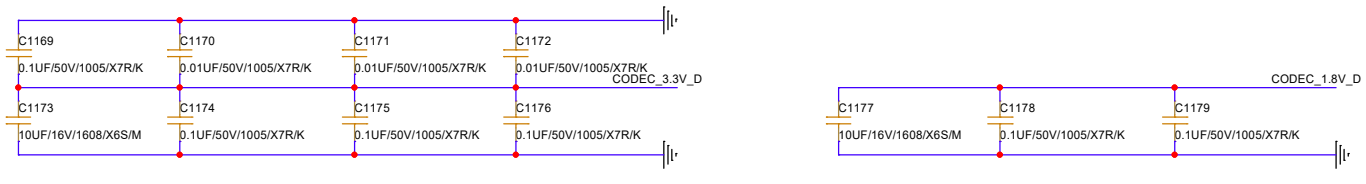
| TLV320AIC2x CONNECTIONS | M/S PIN | | FSD PIN | | COMMENTS |
|---|---|---|---|---|---|
| | MASTER | SLAVE | MASTER | SLAVE | |
| Stand-alone | High | Low | Pull high | Low | |
| Master-slave cascade | High | Low | Connect to the next slave's FS (see Figure 23) | | Last slave's FSD pin is pulled high |
| Slave-slave cascade | NA | NA | NA | NA | Not supported |