Audio Codec1

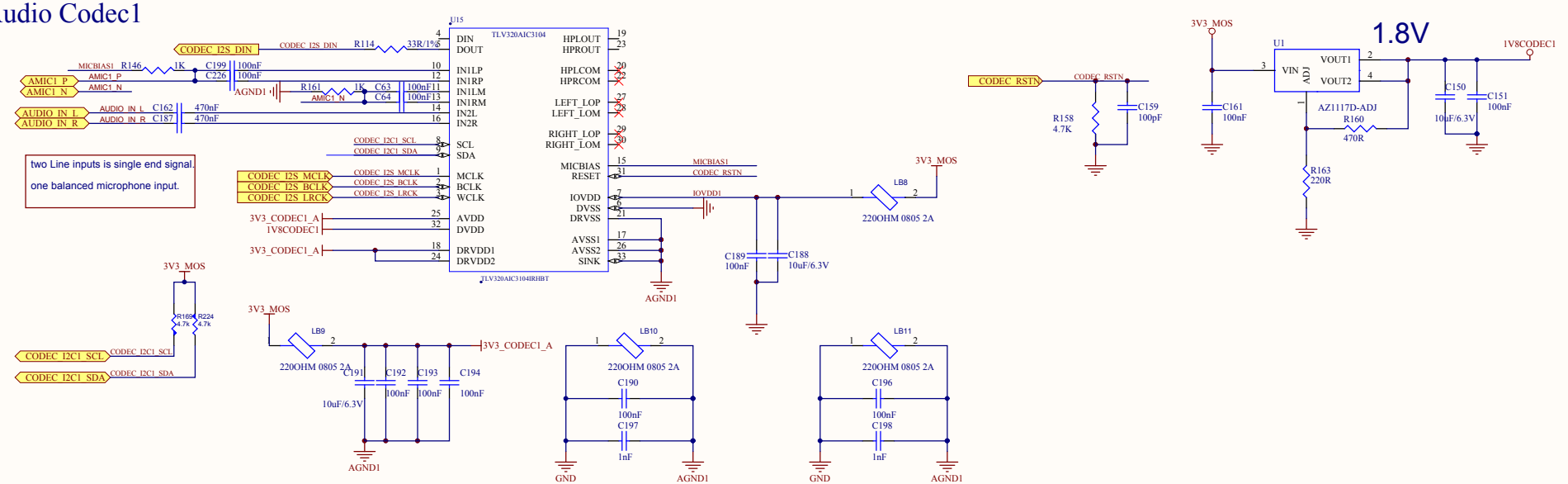

Audio Codec2

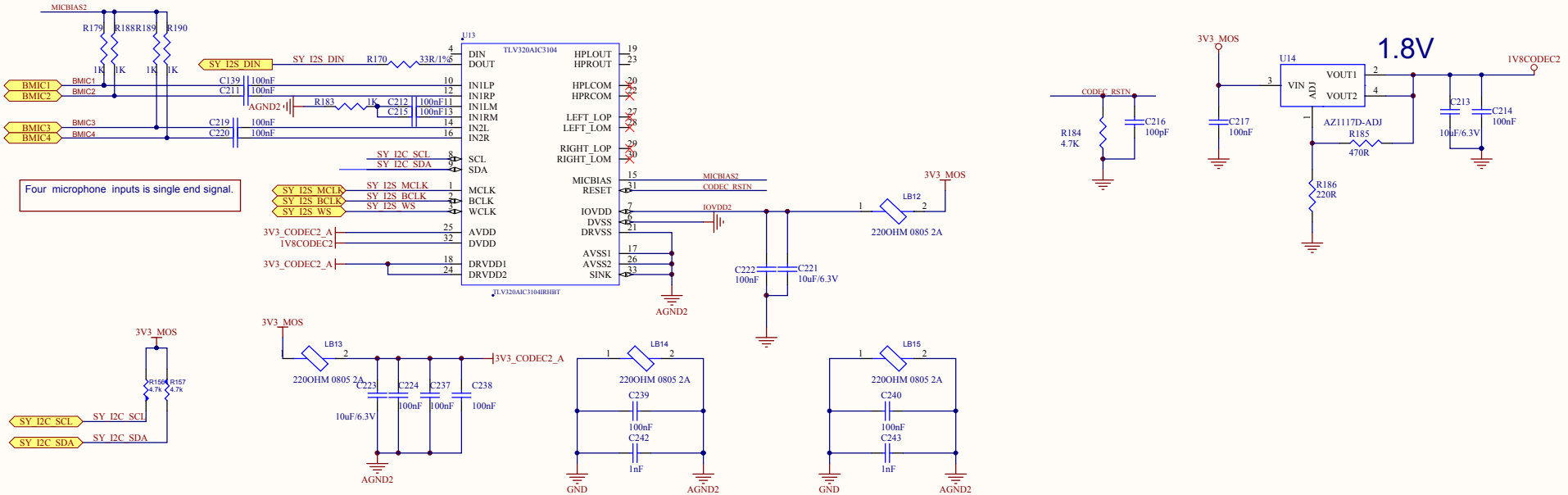

Sunniwell

Title: 16 Audio Codec.SchDoc	Size: 1650x1170
Page: 16 of 19 DrawnBy: *	CheckedBy: *
CompanyName: *	
ModifiedDate: 2017/9/8	Revision: *