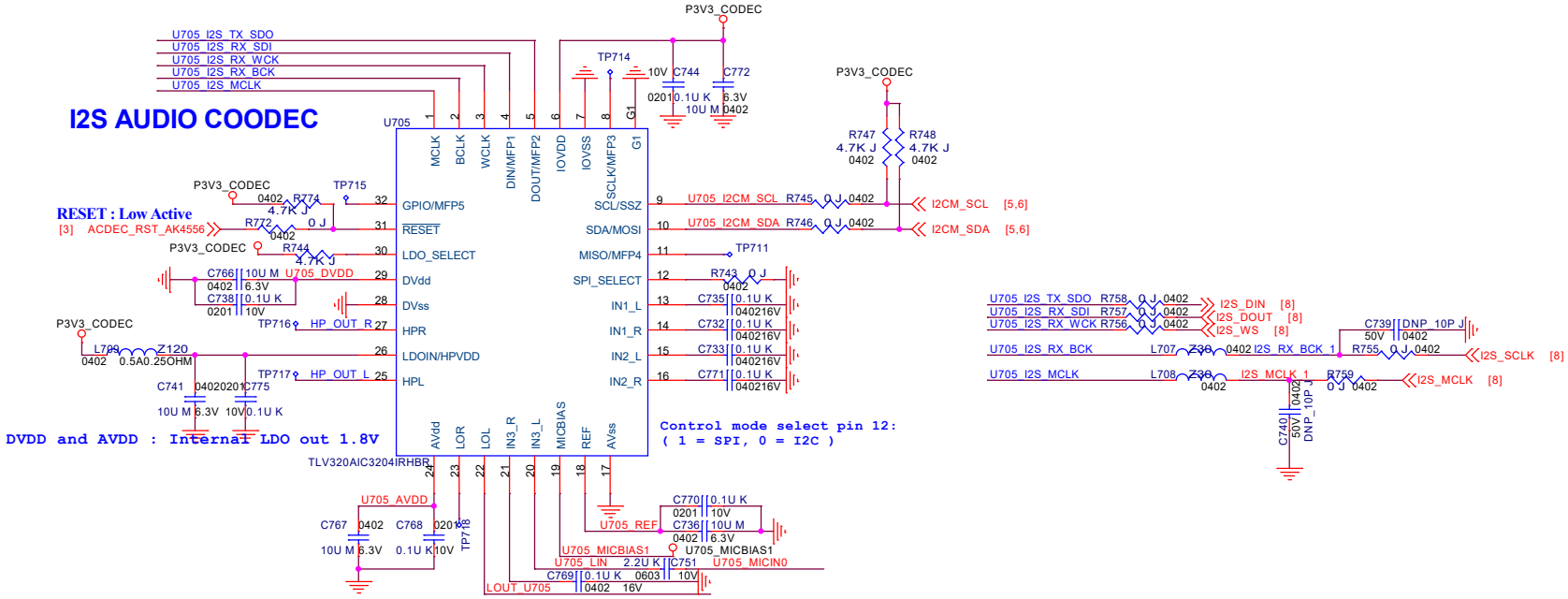

Title	<Title>
Size A	Document Number <Doc>
Rev	<RevCode>
Date: Thursday, November 26, 2020	Sheet 1 of 1