# Amplifier TPA2037D1

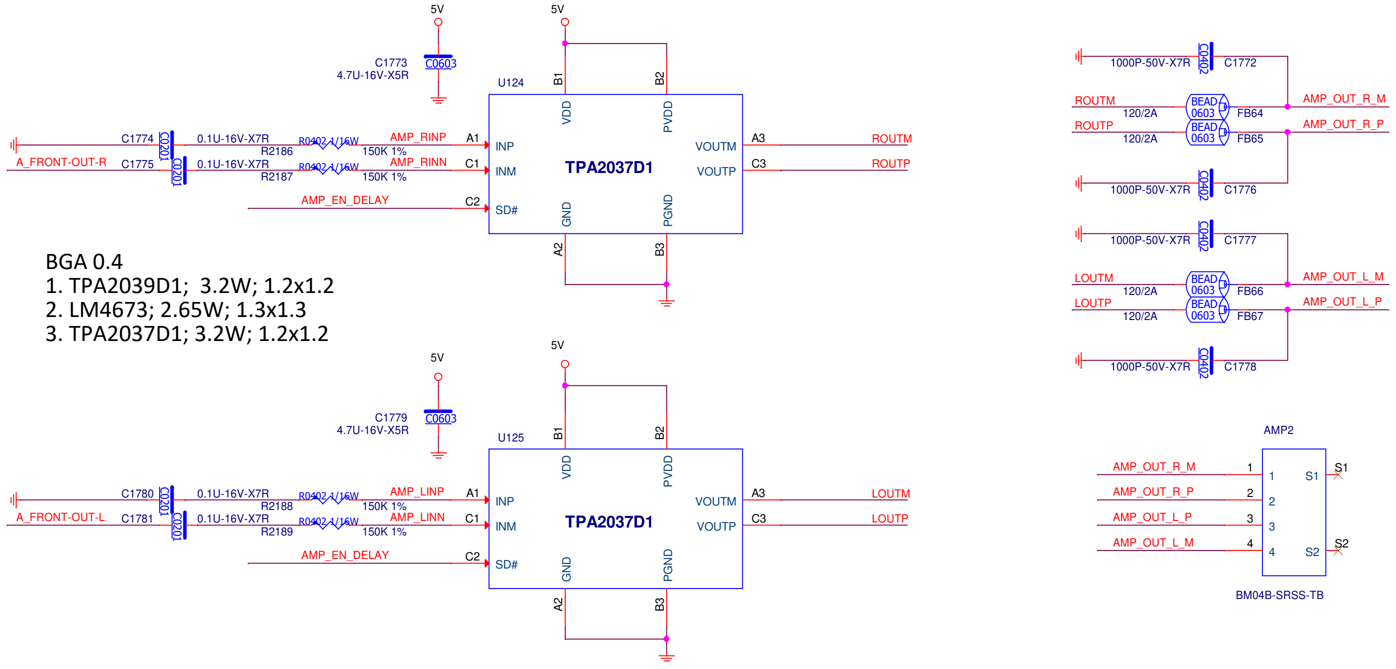

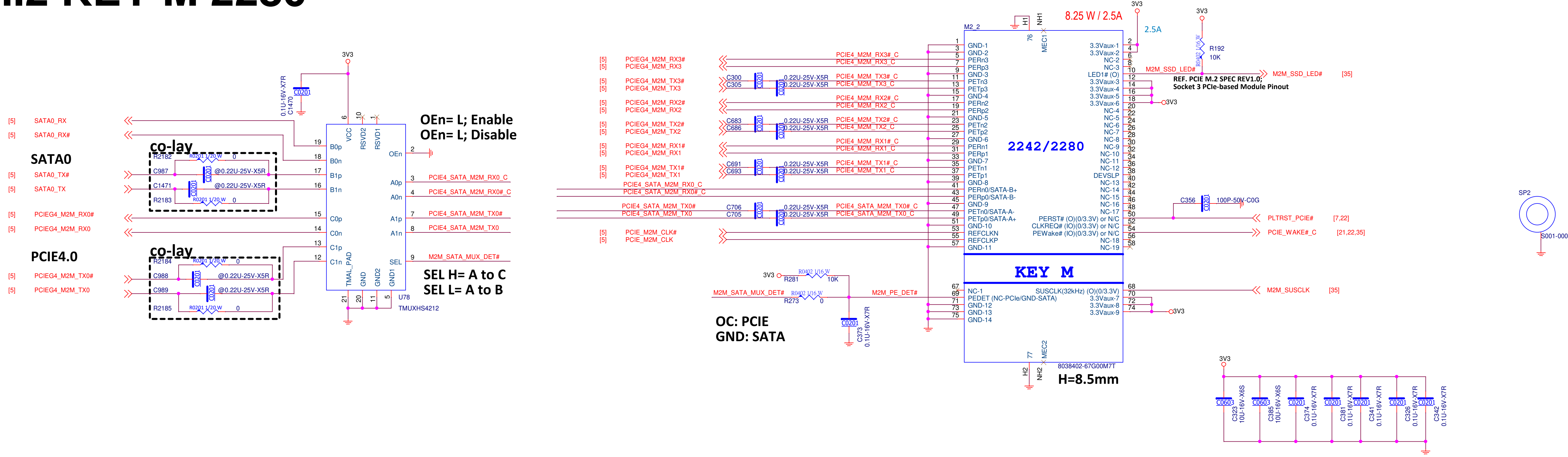
# M.2 KEY M 2280