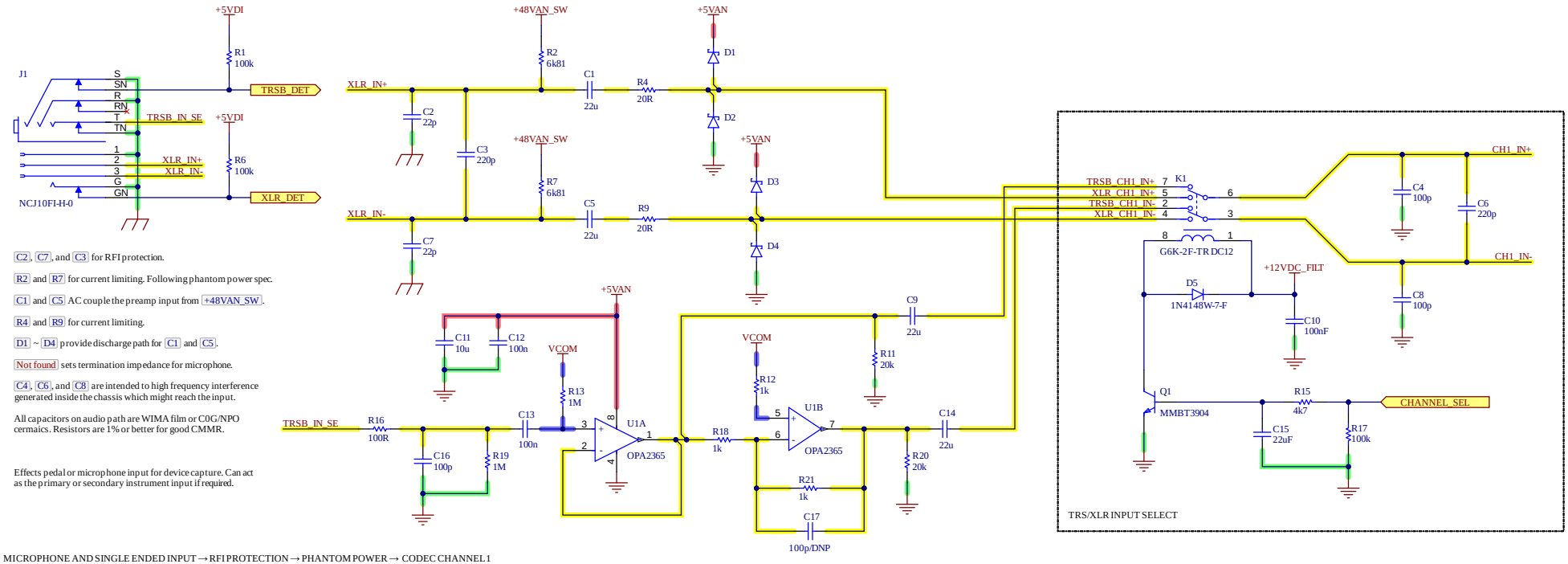

C2, C7, and C3 for RFI protection.

R2 and R7 for current limiting. Following phantom power spec.

C1 and C5 AC couple the preamp input from +48VAN_SW.

R4 and R9 for current limiting.

D1 ~ D4 provide discharge path for C1 and C5.

Not found sets termination impedance for microphone.

C4, C6, and C8 are intended to high frequency interference generated inside the chassis which might reach the input.

All capacitors on audio path are WIMA film or C0G/NPO cermaics. Resistors are 1% or better for good CMMR.

Effects pedal or microphone input for device capture. Can act as the primary or secondary instrument input if required.

MICROPHONE AND SINGLE ENDED INPUT → RFI PROTECTION → PHANTOM POWER → CODEC CHANNEL 1

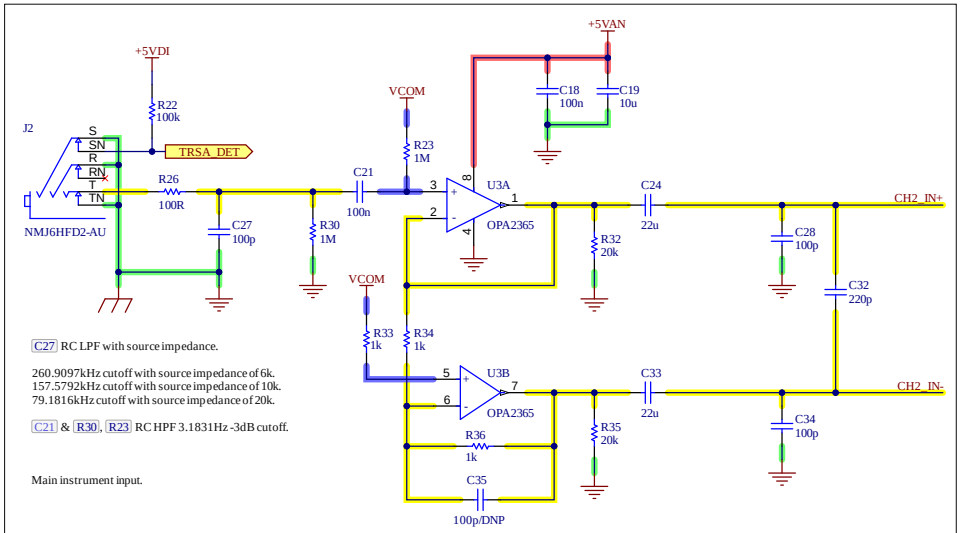

C27 RC LPF with source impedance.

260.9097kHz cutoff with source impedance of 6k.
157.5792kHz cutoff with source impedance of 10k.
79.1816kHz cutoff with source impedance of 20k.

C21 & R30, R23 RC HPF 3.1831Hz -3dB cutoff.

Main instrument input.

SINGLE ENDED INPUT → DIFFERENTIAL CONVERSION → CODEC CHANNEL 2

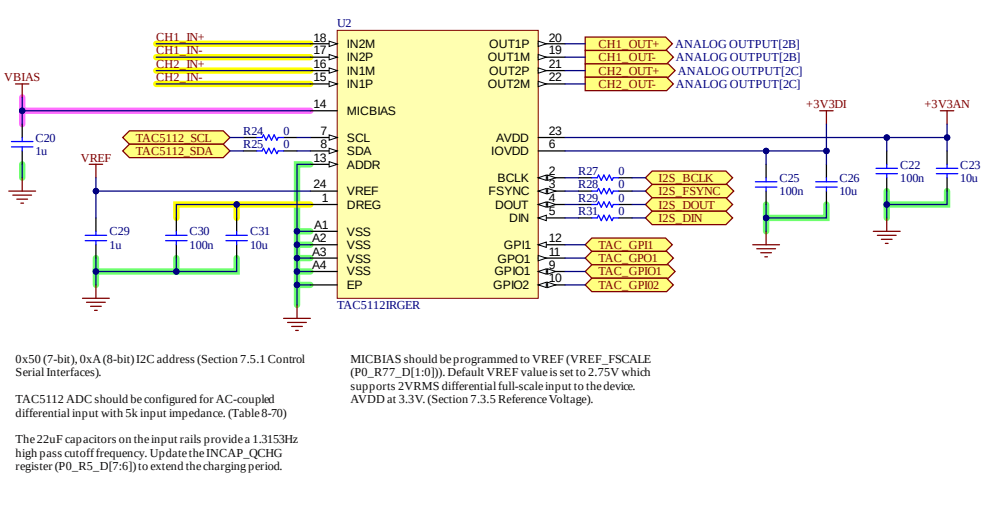

0x50 (7-bit), 0xA (8-bit) I2C address (Section 7.5.1 Control Serial Interfaces).

TAC5112 ADC should be configured for AC-coupled differential input with 5k input impedance. (Table 8-70)

The 22uF capacitors on the input rails provide a 1.3153Hz high pass cutoff frequency. Update the INCAP_QCHG register (P0_R5_D[7:6]) to extend the charging period.

MICBIAS should be programmed to VREF (VREF_FSCALE (P0_R77_D[1:0])). Default VREF value is set to 2.75V which supports 2VRMS differential full-scale input to the device. AVDD at 3.3V. (Section 7.3.5 Reference Voltage).

CODEC (TI TAC5112)