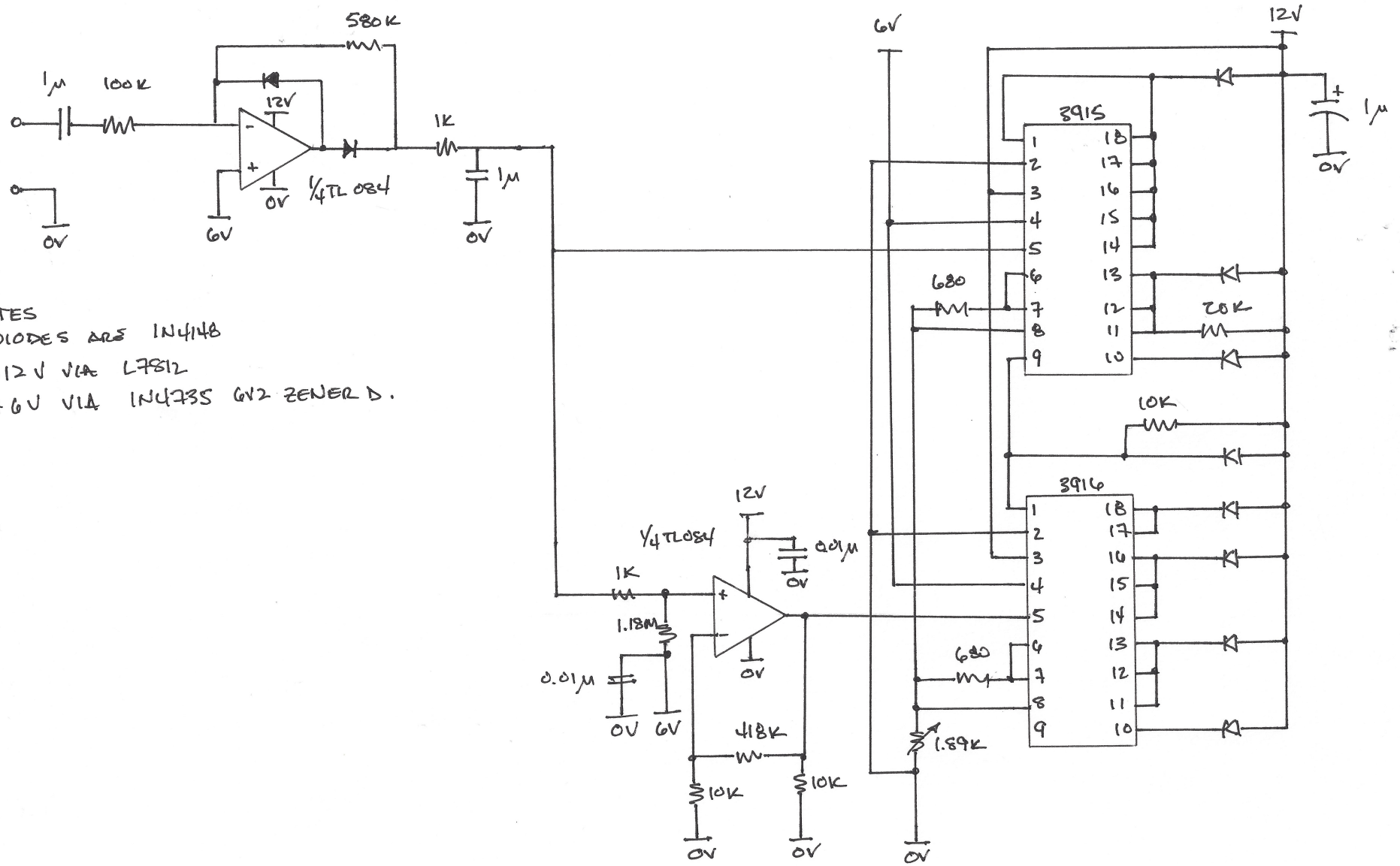

NOTES

- DIODES ARE 1N4148
- +12 V VIA L7812
- +6V VIA 1N4735 6V2 ZENER D.