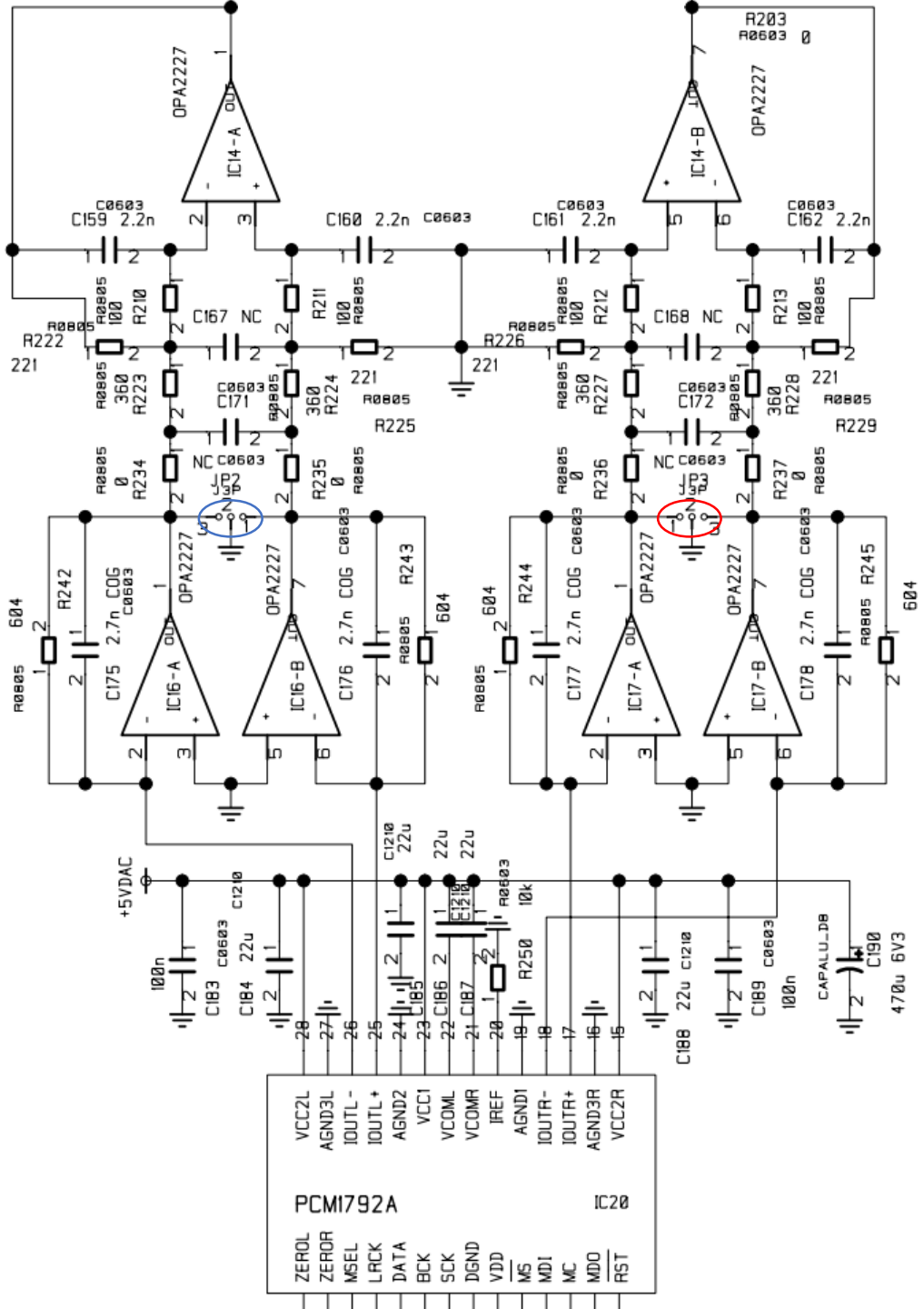
OPA2227
IC14-A
IC14-B
IC16-A
IC16-B
IC17-A
IC17-B
R203
R0603 0
C159 2.2n
C160 2.2n
C161 2.2n
C162 2.2n
C167 NC
C168 NC
C171
C172
R222
R226
R225
R229
R210
R211
R212
R213
R223
R224
R227
R228
R234
R235
R236
R237
R242
R243
R244
R245
JP2
JP3
C175 2.7n COG
C176 2.7n COG
C177 2.7n COG
C178 2.7n COG
+5VDAC
C183 100n
C184 22u
C188 22u
C189 100n
C190 470u 6V3
CAPALU_D8
R250 10k
PCM1792A
IC20
VCC2L
AGND3L
IOUTL-
IOUTL+
AGND2
VCC1
VCOML
VCOMR
IREF
AGND1
IOUTR-
IOUTR+
AGND3R
VCC2R
ZEROL
ZEROR
MSEL
LRCK
DATA
BCK
SCK
DGND
VDD
MS
MDI
MC
MDO
RST

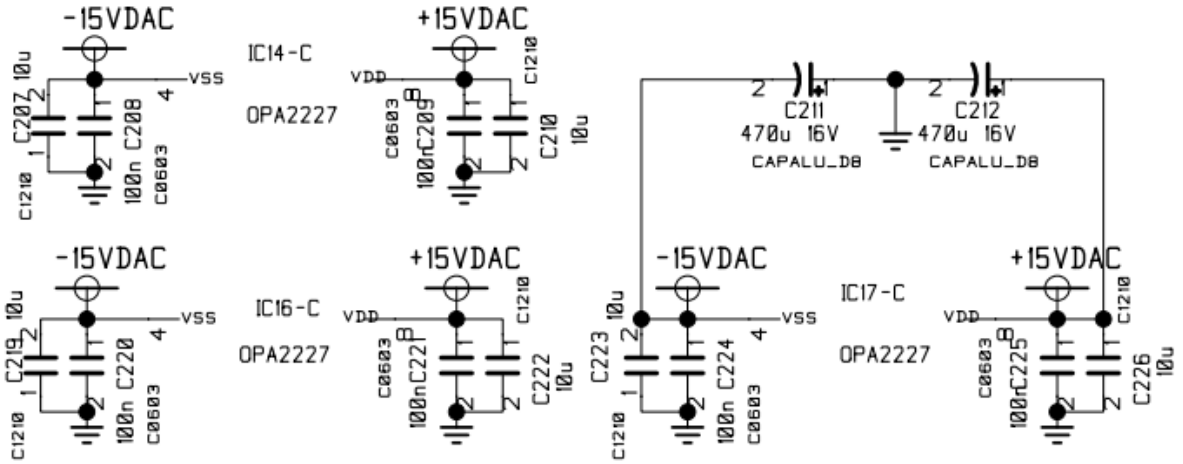
-15VDAC
+15VDAC
IC14-C
OPA2227
C207 10u
C208 100n
C209 100n
C210 10u
C211 470u 16V
C212 470u 16V
CAPALU_D8
IC16-C
C219 10u
C220 100n
C221 100n
C222 10u
IC17-C
C223 10u
C224 100n
C225 100n
C226 10u
VSS
VDD

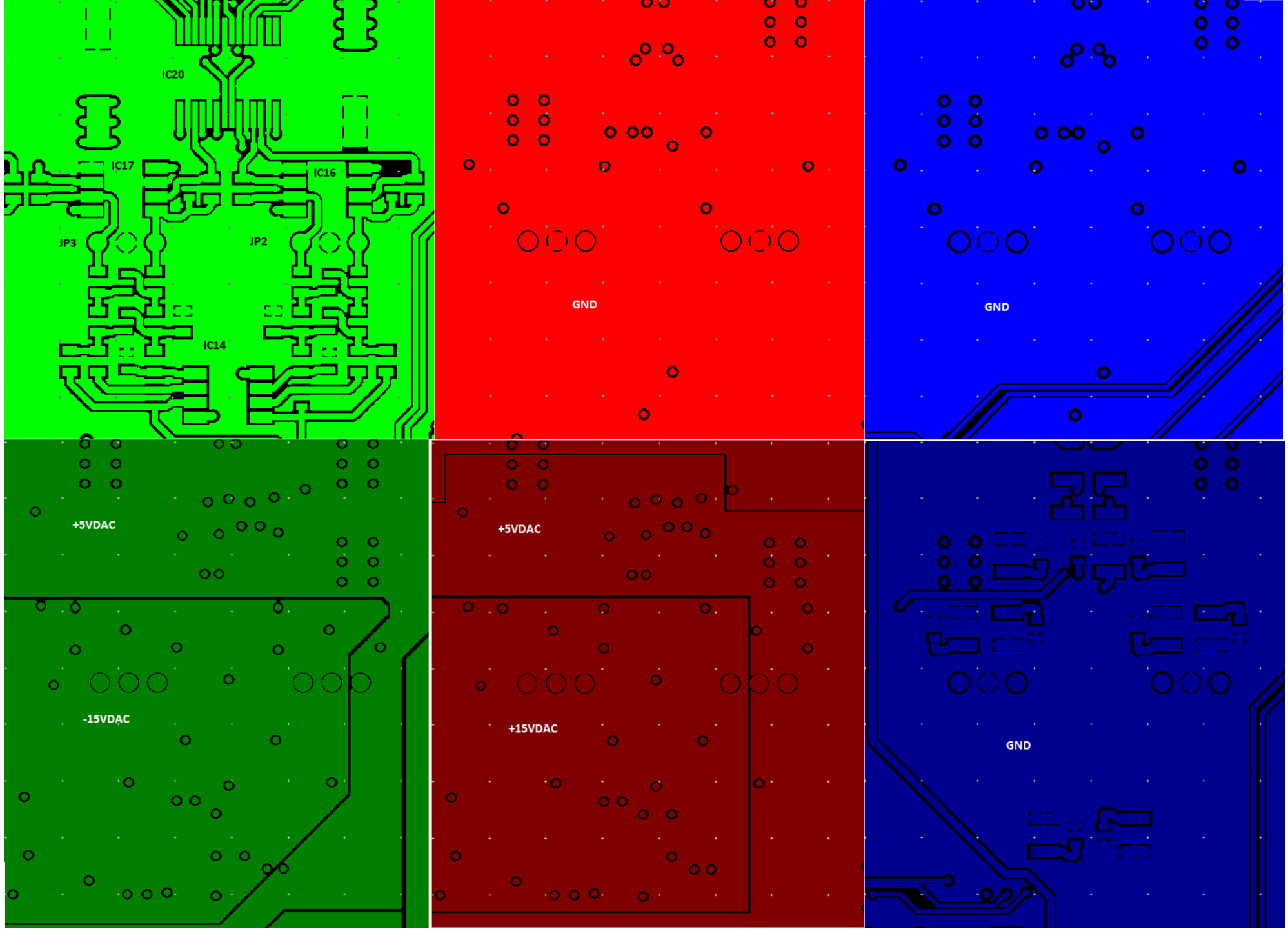
IC20
IC17
IC16
JP3
JP2
IC14
GND
GND
+5VDAC
+5VDAC
-15VDAC
+15VDAC
GND