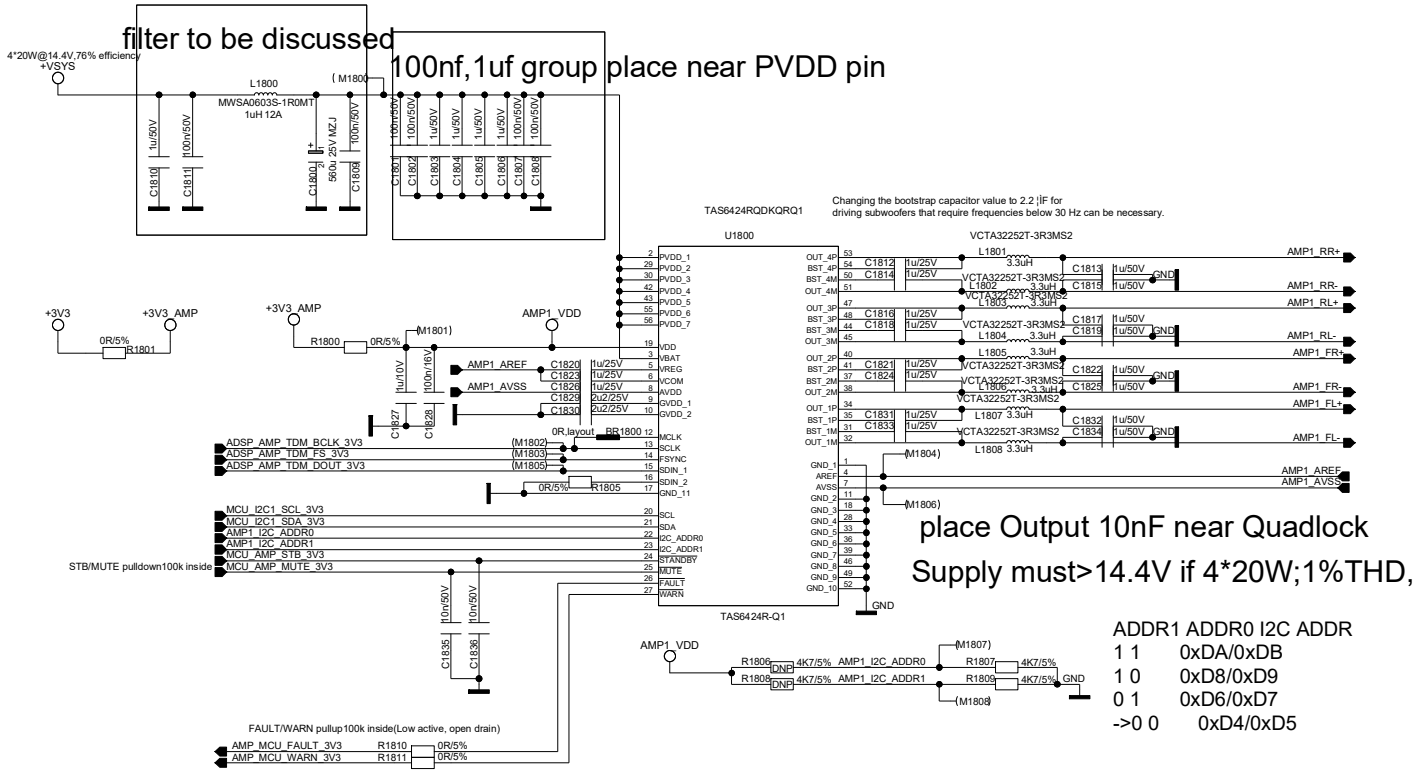

ADDR1	ADDR0	I2C ADDR
1	1	0xDA/0xDB
1	0	0xD8/0xD9
0	1	0xD6/0xD7
->0	0	0xD4/0xD5