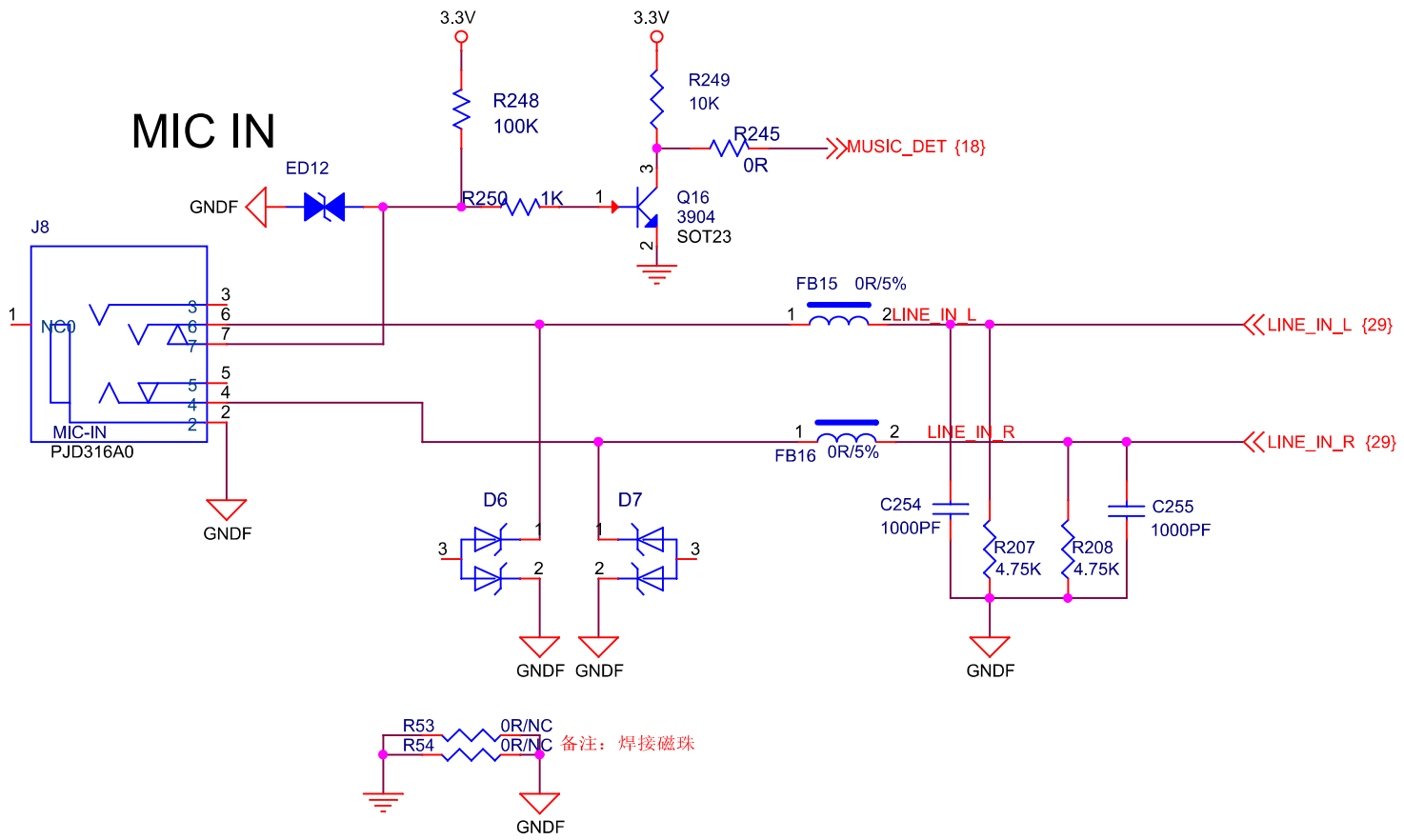

Title
V2

Size	Document Number	Rev
Custom	<Doc>	<RevCode>

Date: Wednesday, June 24, 2020 Sheet 26 of 31

LINE_IN TO I2S

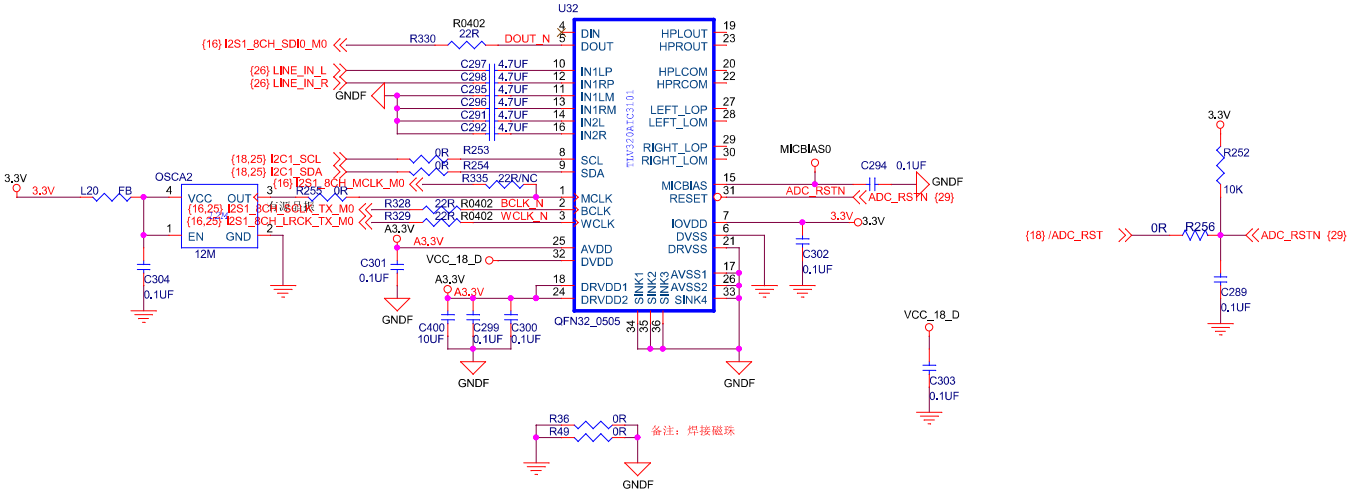

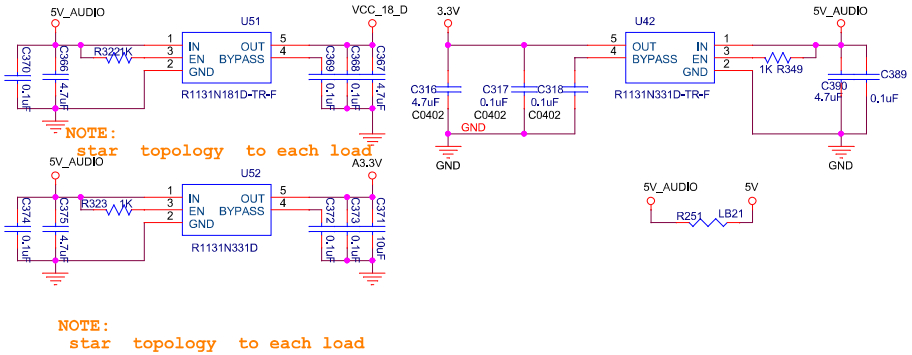

POWER

Title	V2		
Size A3	Document Number SYSTEM POWER		Rev 1.0
Date: Wednesday, June 24, 2020	Sheet 29 of 31		