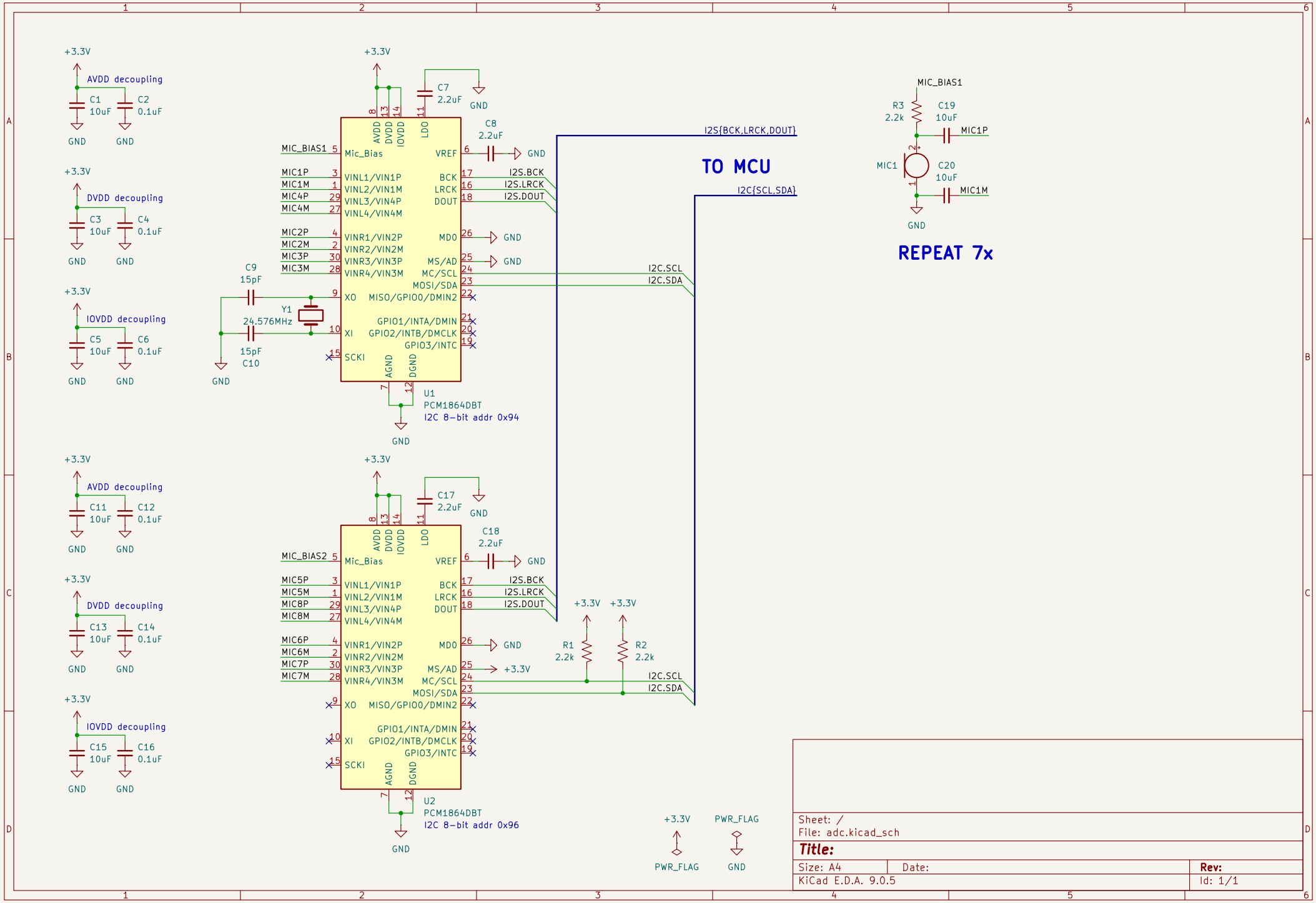
+3.3V
AVDD decoupling
C1 10uF
C2 0.1uF
GND
DVDD decoupling
C3 10uF
C4 0.1uF
IOVDD decoupling
C5 10uF
C6 0.1uF
C7 2.2uF
C8 2.2uF
C9 15pF
C10 15pF
Y1 24.576MHz
MIC_BIAS1
Mic_Bias
VREF
VINL1/VIN1P
VINL2/VIN1M
VINL3/VIN4P
VINL4/VIN4M
VINR1/VIN2P
VINR2/VIN2M
VINR3/VIN3P
VINR4/VIN3M
BCK
LRCK
DOUT
MD0
MS/AD
MC/SCL
MOSI/SDA
MISO/GPIO0/DMIN2
GPIO1/INTA/DMIN
GPIO2/INTB/DMCLK
GPIO3/INTC
XO
XI
SCKI
AGND
DGND
LDO
I2S.BCK
I2S.LRCK
I2S.DOUT
I2C.SCL
I2C.SDA
U1
PCM1864DBT
I2C 8-bit addr 0x94
I2S{BCK,LRCK,DOUT}
TO MCU
I2C{SCL,SDA}
MIC_BIAS1
R3 2.2k
C19 10uF
MIC1P
MIC1
C20 10uF
MIC1M
REPEAT 7x
C11 10uF
C12 0.1uF
C13 10uF
C14 0.1uF
C15 10uF
C16 0.1uF
C17 2.2uF
C18 2.2uF
MIC_BIAS2
MIC5P
MIC5M
MIC8P
MIC8M
MIC6P
MIC6M
MIC7P
MIC7M
R1 2.2k
R2 2.2k
U2
PCM1864DBT
I2C 8-bit addr 0x96
PWR_FLAG
Sheet: /
File: adc.kicad_sch
Title:
Size: A4
Date:
Rev:
KiCad E.D.A. 9.0.5
Id: 1/1