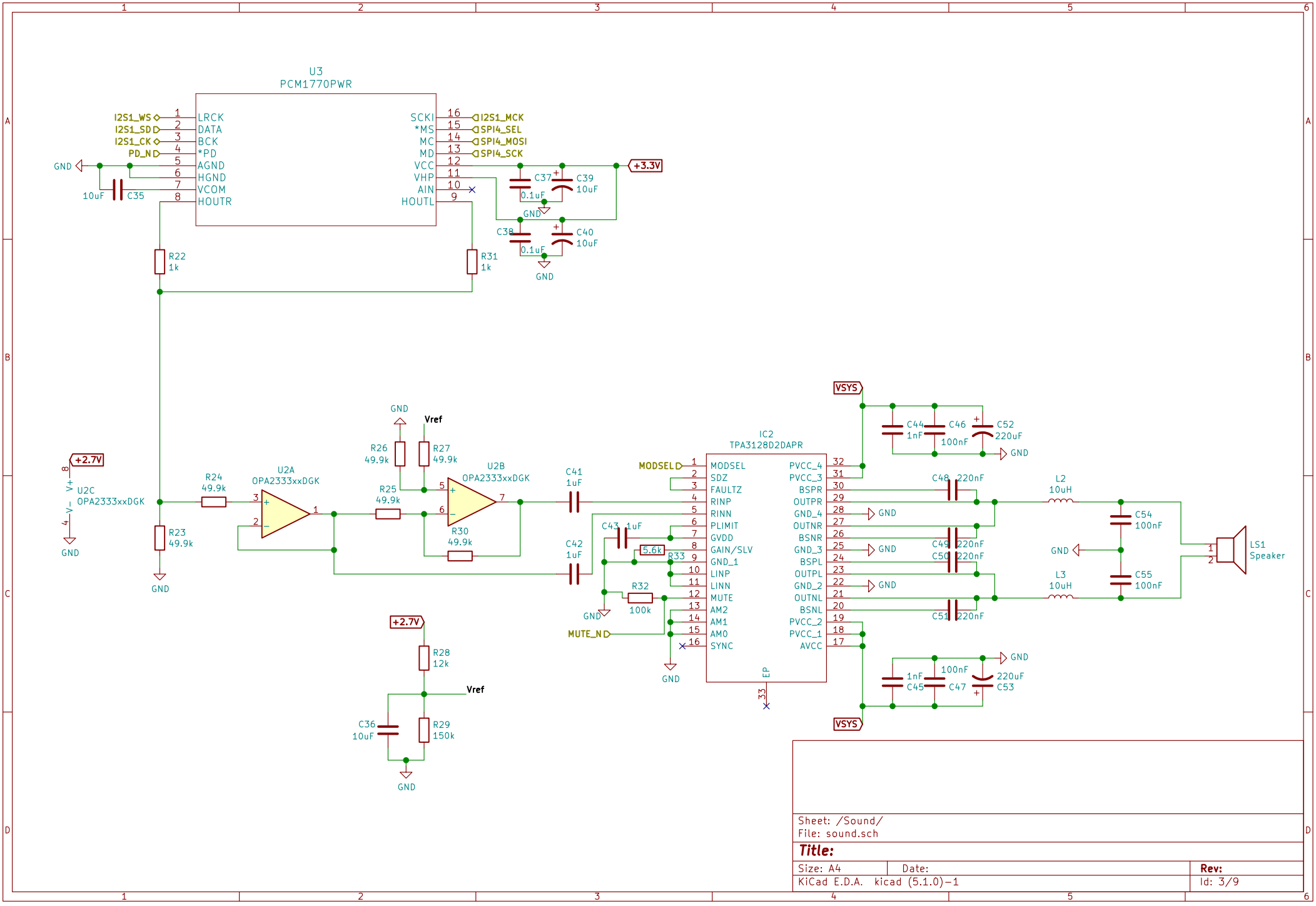

Sheet: /Sound/
File: sound.sch

Title:

Size: A4	Date:	Rev:
KiCad E.D.A. kicad (5.1.0)-1		Id: 3/9