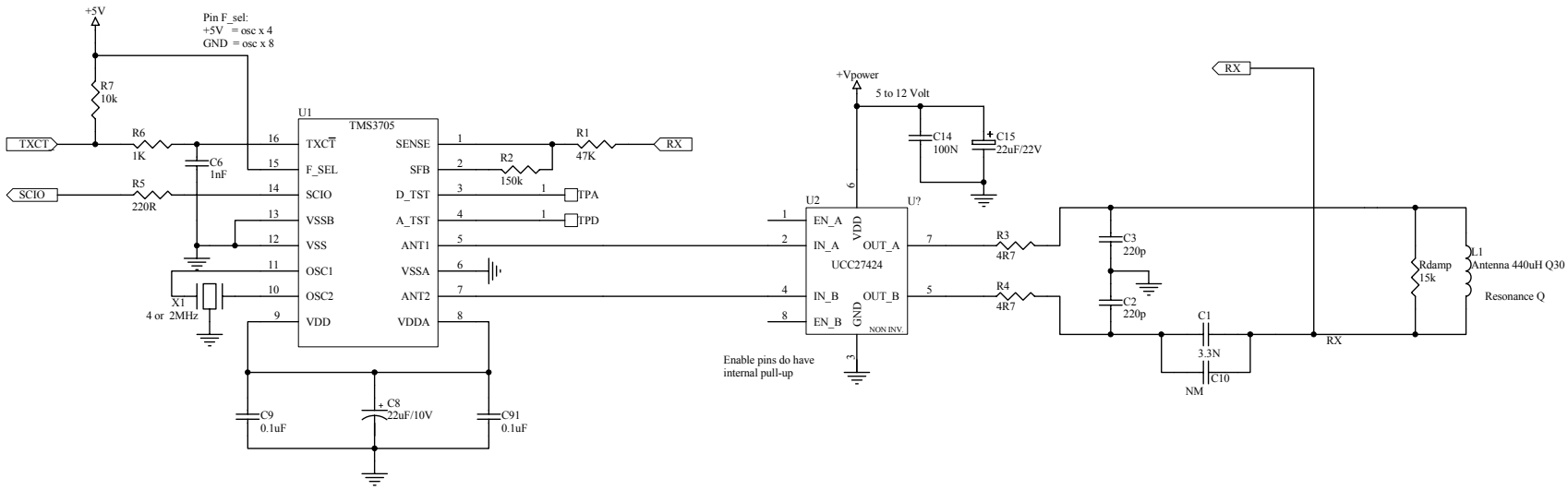

TEXAS INSTRUMENTS

Siegfried Langner
July 2006