NFC Controller

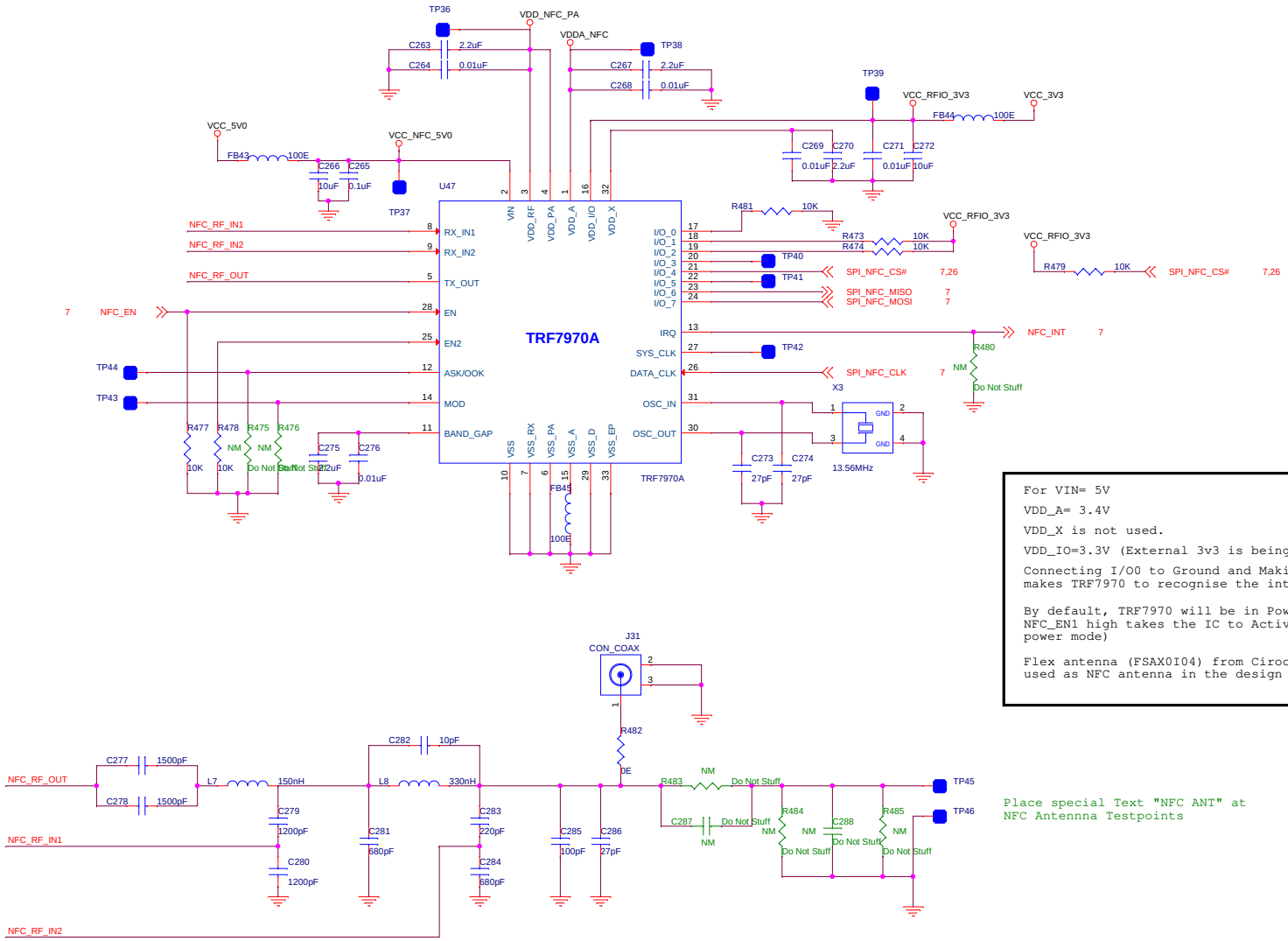

For VIN= 5V

VDD_A= 3.4V

VDD_X is not used.

VDD_IO=3.3V (External 3v3 is being given).

Connecting I/O0 to Ground and Making I/O1 and I/O2 pulled up makes TRF7970 to recognise the interface as SPI

By default, TRF7970 will be in Power down mode. And making NFC_EN1 high takes the IC to Active mode ie., Mode 4 (Full power mode)

Flex antenna (FSAX0I04) from Cirocomm Technology will be used as NFC antenna in the design

Place special Text "NFC ANT" at NFC Antennna Testpoints