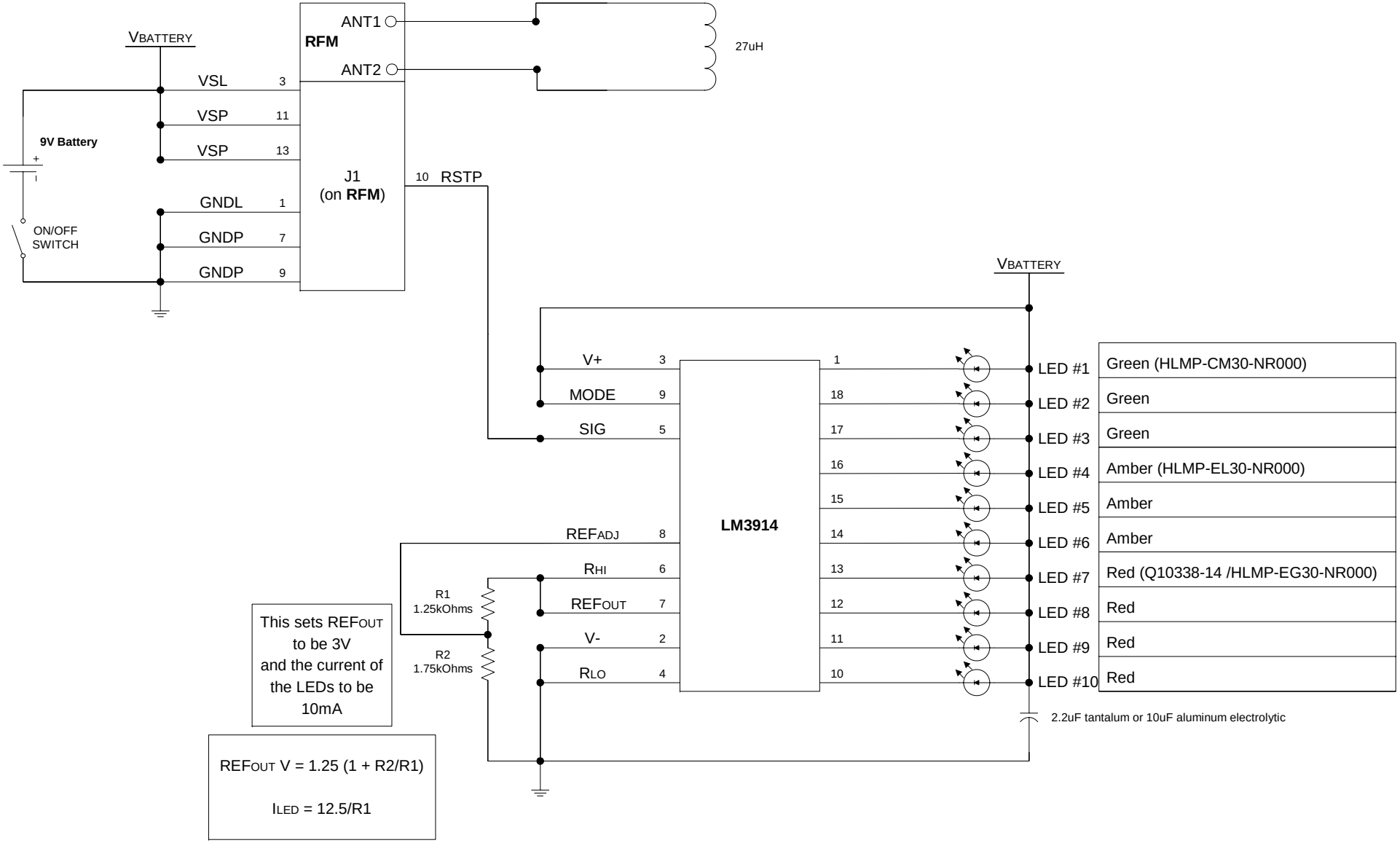Sniffer Schematic