ADC

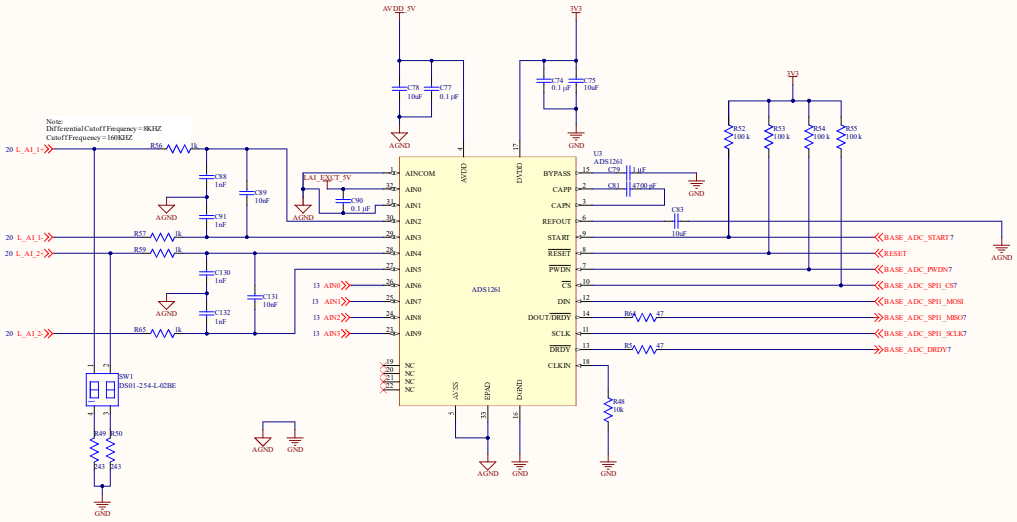
AVDD_5V
3V3
C78 10uF
C77 0.1 µF
C74 0.1 µF
C75 10uF
AGND
GND
Note:
Differential Cutoff Frequency = 8KHZ
Cutoff Frequency = 160KHZ
20 L_AI_1+
20 L_AI_1-
20 L_AI_2+
20 L_AI_2-
R56 1k
R57 1k
R59 1k
R65 1k
C88 1nF
C91 1nF
C39 10nF
C130 1nF
C132 1nF
C131 10nF
EA1_EXCT_5V
C90 0.1 µF
U3
ADS1261
C79 1 µF
C81 4700 pF
C83 10nF
R52 100 k
R53 100 k
R54 100 k
R55 100 k
AINCOM
AIN0
AIN1
AIN2
AIN3
AIN4
AIN5
AIN6
AIN7
AIN8
AIN9
13 AIN0
13 AIN1
13 AIN2
13 AIN3
AVDD
DVDD
BYPASS
CAPP
CAPN
REFOUT
START
RESET
PWDN
CS
DIN
DOUT/DRDY
SCLK
DRDY
CLKIN
ADS1261
AVSS
EPAD
DGND
R64 47
R5 47
R48 10k
BASE_ADC_START7
RESET
BASE_ADC_PWDN7
BASE_ADC_SPI1_CS7
BASE_ADC_SPI1_MOSI
BASE_ADC_SPI1_MISO7
BASE_ADC_SPI1_SCLK7
BASE_ADC_DRDY7
SW1
DS01-254-L-02BE
R49 543
R50 543

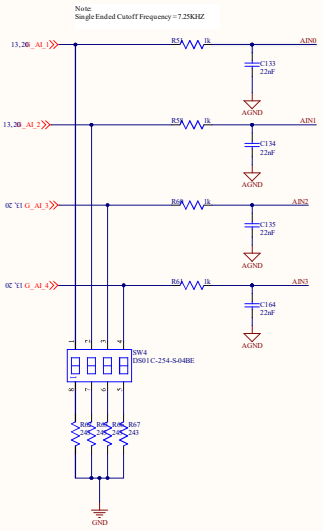
Note:
Single Ended Cutoff Frequency = 7.25KHZ
13,20 L_AI_1
13,20 L_AI_2
20 L_AI_3
20 L_AI_4
R54 1k
R55 1k
R66 1k
R64 1k
AIN0
AIN1
AIN2
AIN3
C133 22nF
C134 22nF
C135 22nF
C164 22nF
AGND
SW4
DS01C-254-S-04BE
R66 543
R65 543
R64 543
R67 543
GND