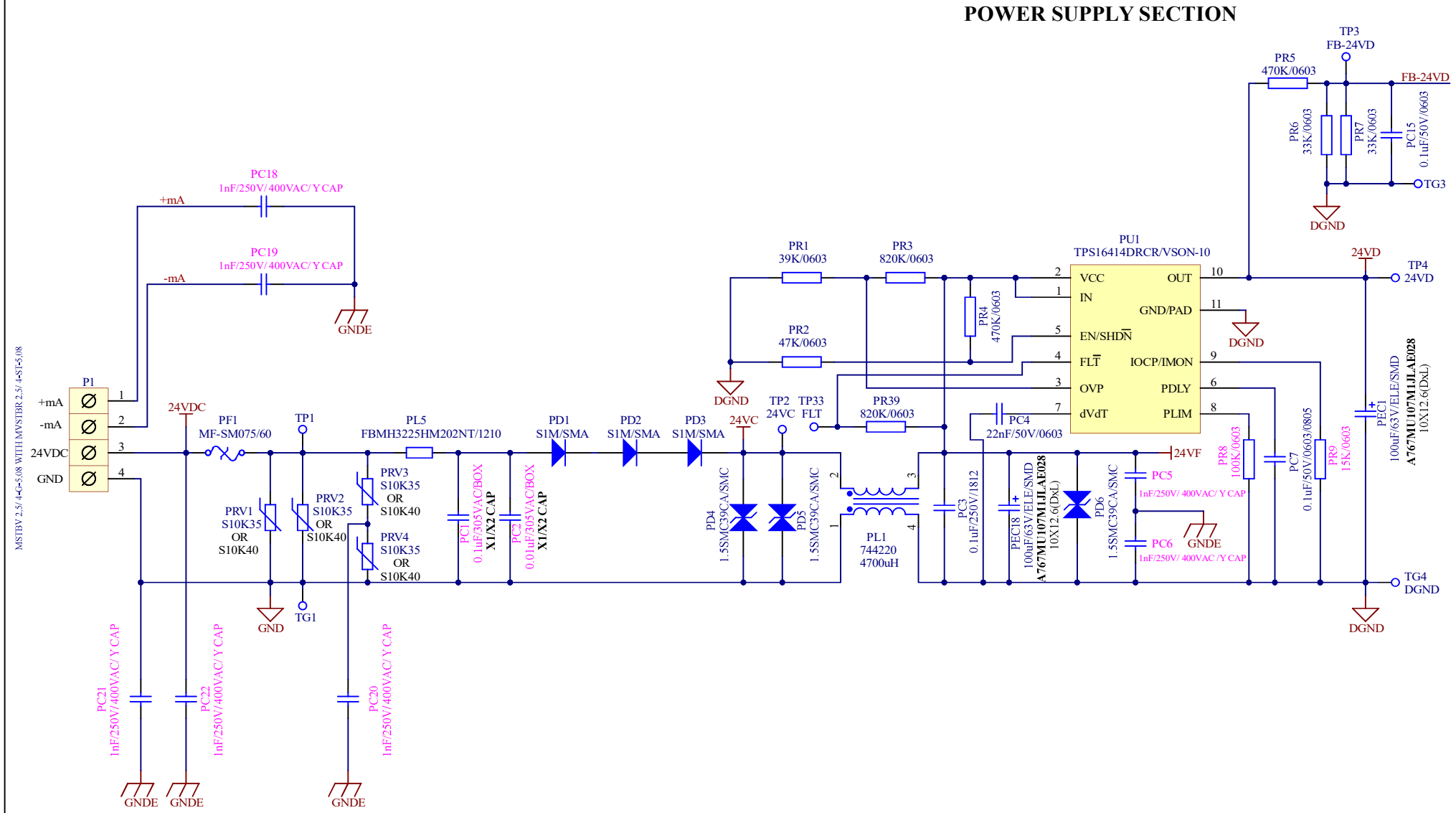POWER SUPPLY SECTION