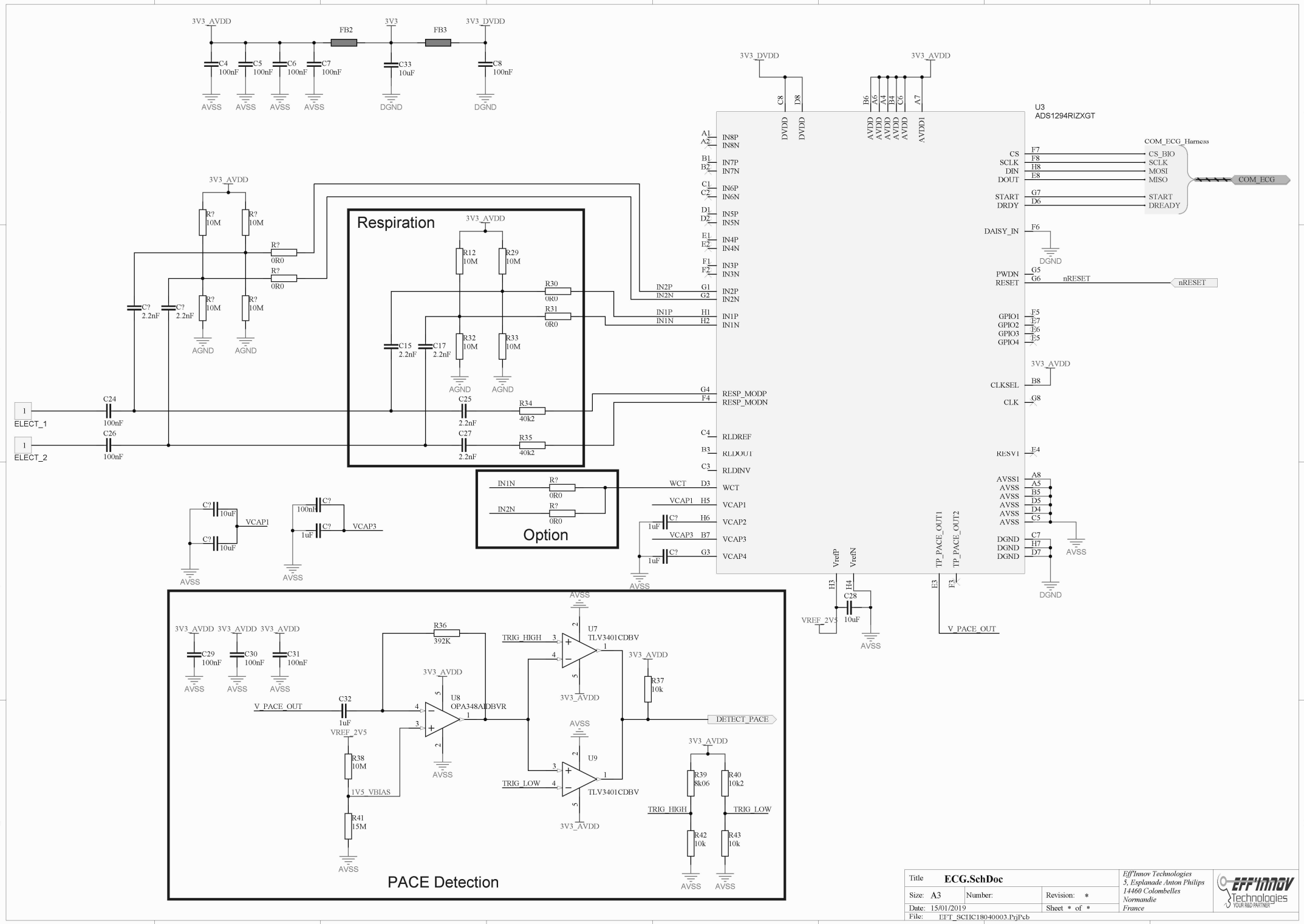

Title	ECG.SchDoc		EFF'INNOV Technologies 5, Esplanade Anton Philips 14460 Colombelles Normandie France
Size: A3	Number:	Revision: *	
Date: 15/01/2019		Sheet * of *	
File:	LIT_SCIIC18040003.PrjPcb		