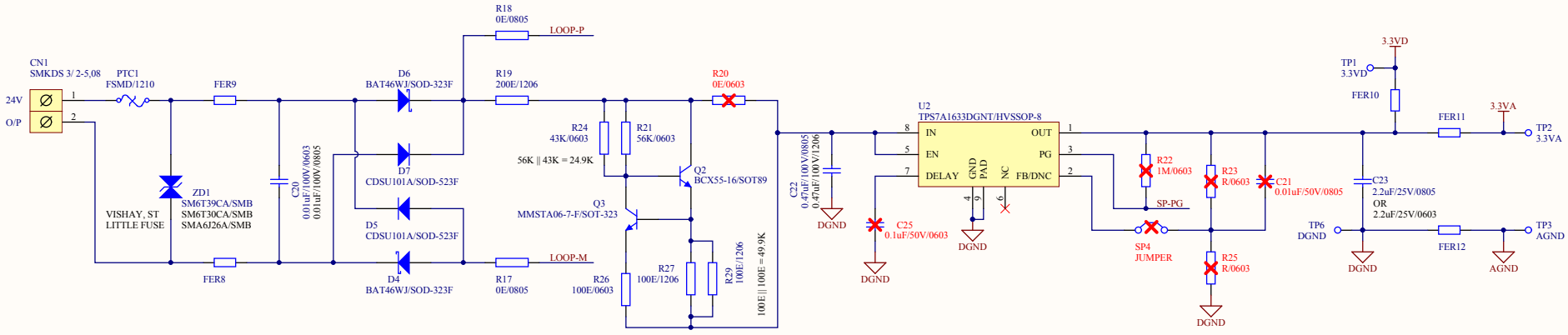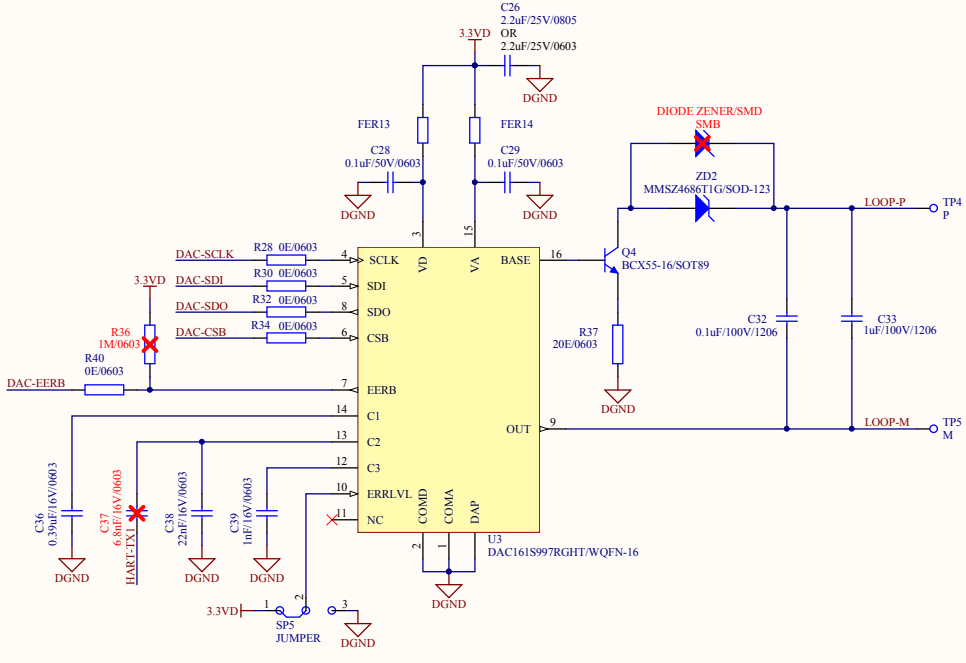4-20mA LOOP POWERED SECTION