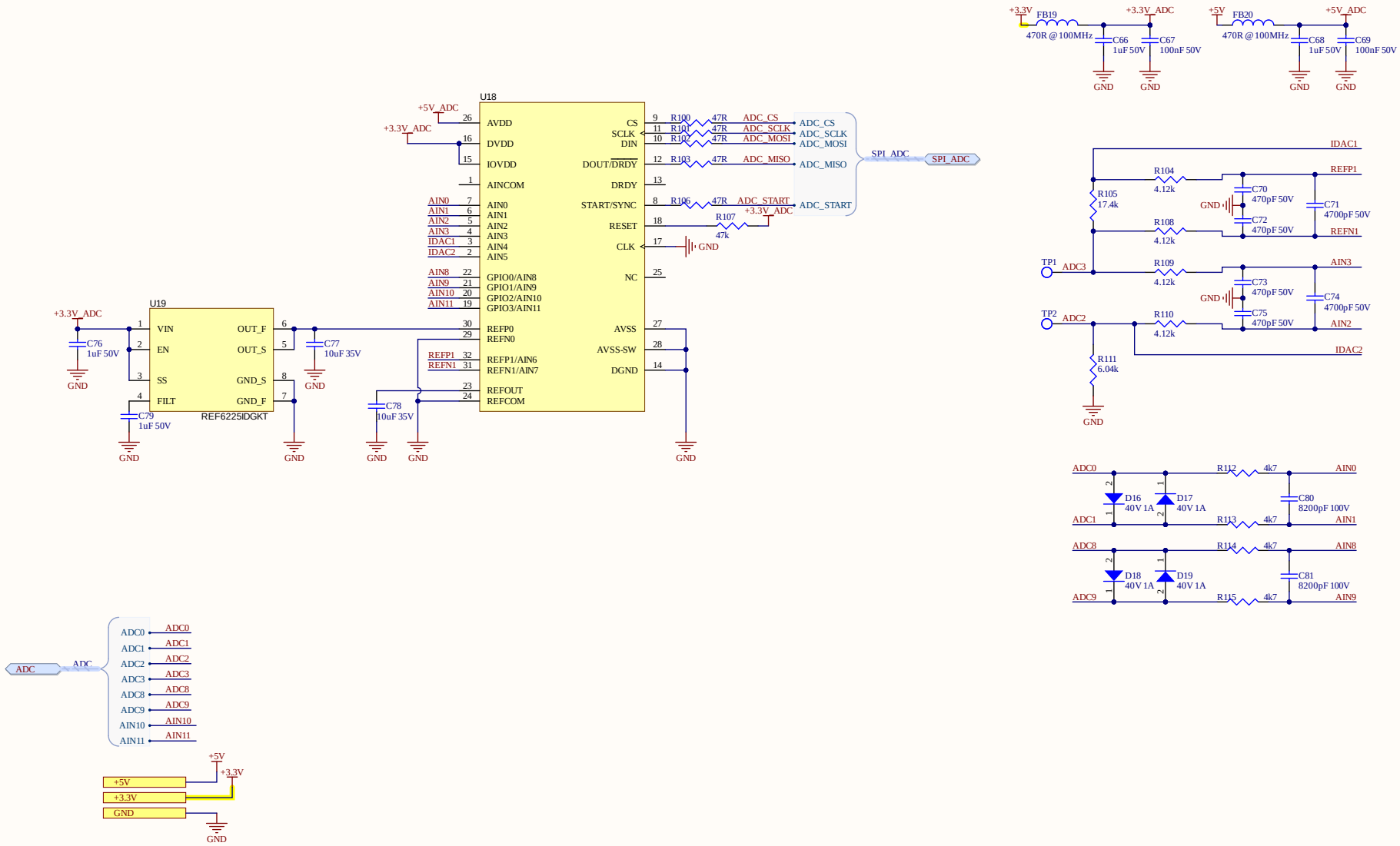

Title		
Size A3	Number	Revision
Date: 3/22/2021		Sheet of
File: C:\Users\..\ADC.SchDoc		Drawn By: