EXTERNAL ADC

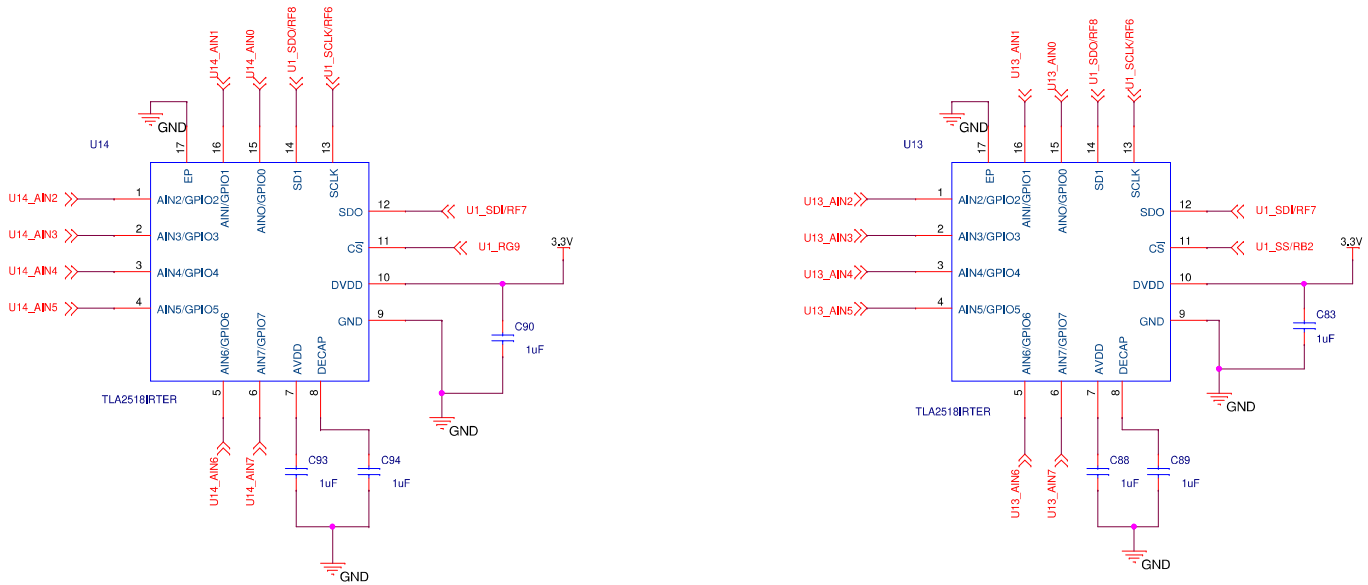

Page Name	10. EXTERNAL ADC		
Title	BeST Electronics		
Size B	Document Number <Doc>		Rev V1.0
Date: Thursday, December 29, 2022	Sheet 10 of 11		