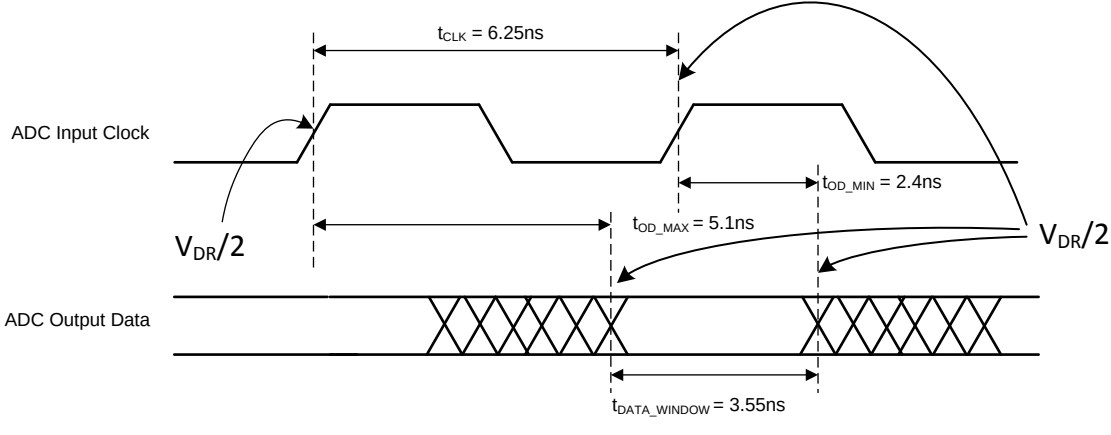
t_{CLK} = 6.25ns
ADC Input Clock
t_{OD_MIN} = 2.4ns
t_{OD_MAX} = 5.1ns
$V_{DR}/2$
$V_{DR}/2$
ADC Output Data
t_{DATA_WINDOW} = 3.55ns