1.0 ADC

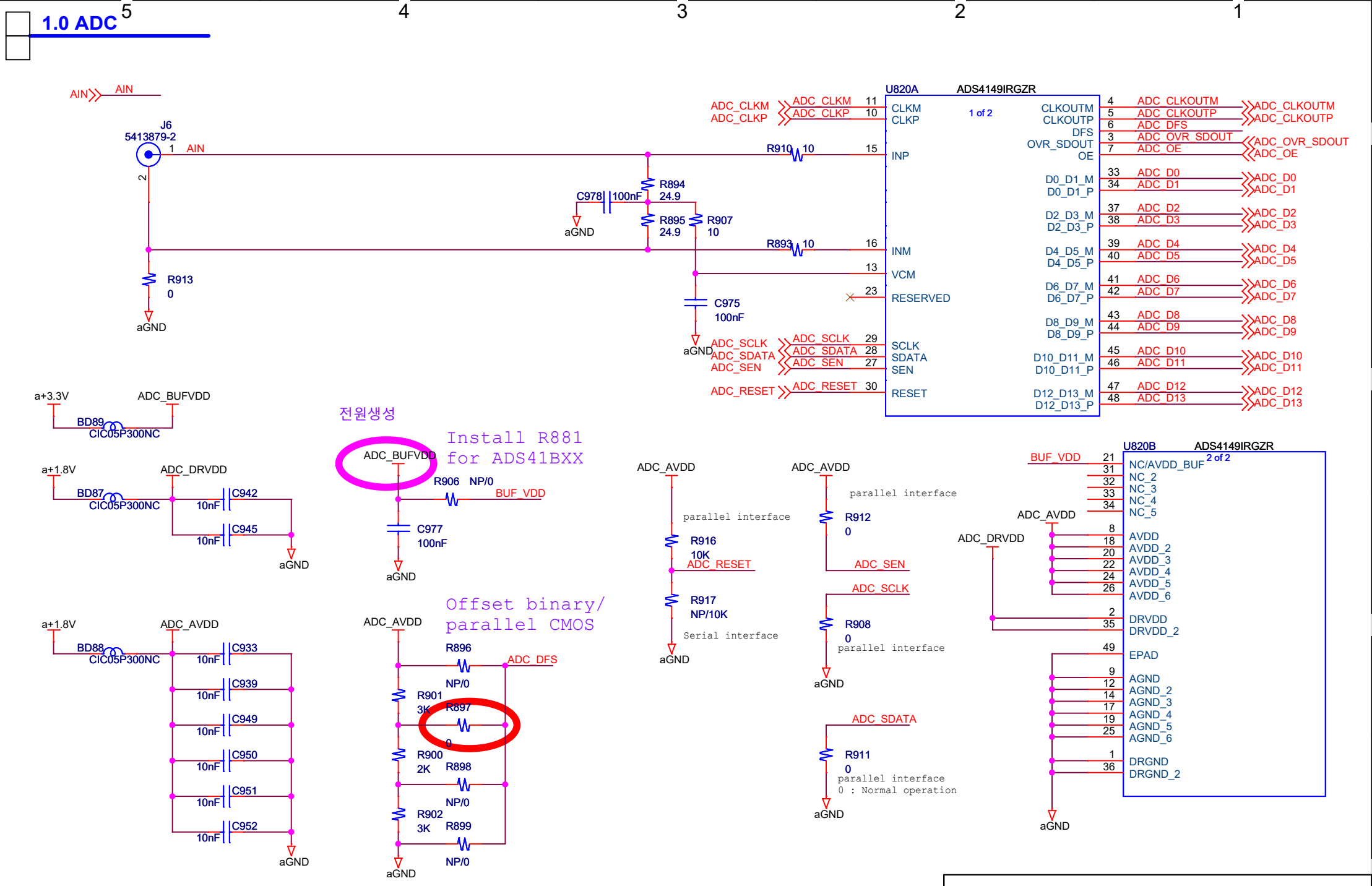

Title	<Title>	
Size A4	Document Number <Doc>	Rev <Rev
Date: Monday, May 19, 2025	Sheet 1 of 1	