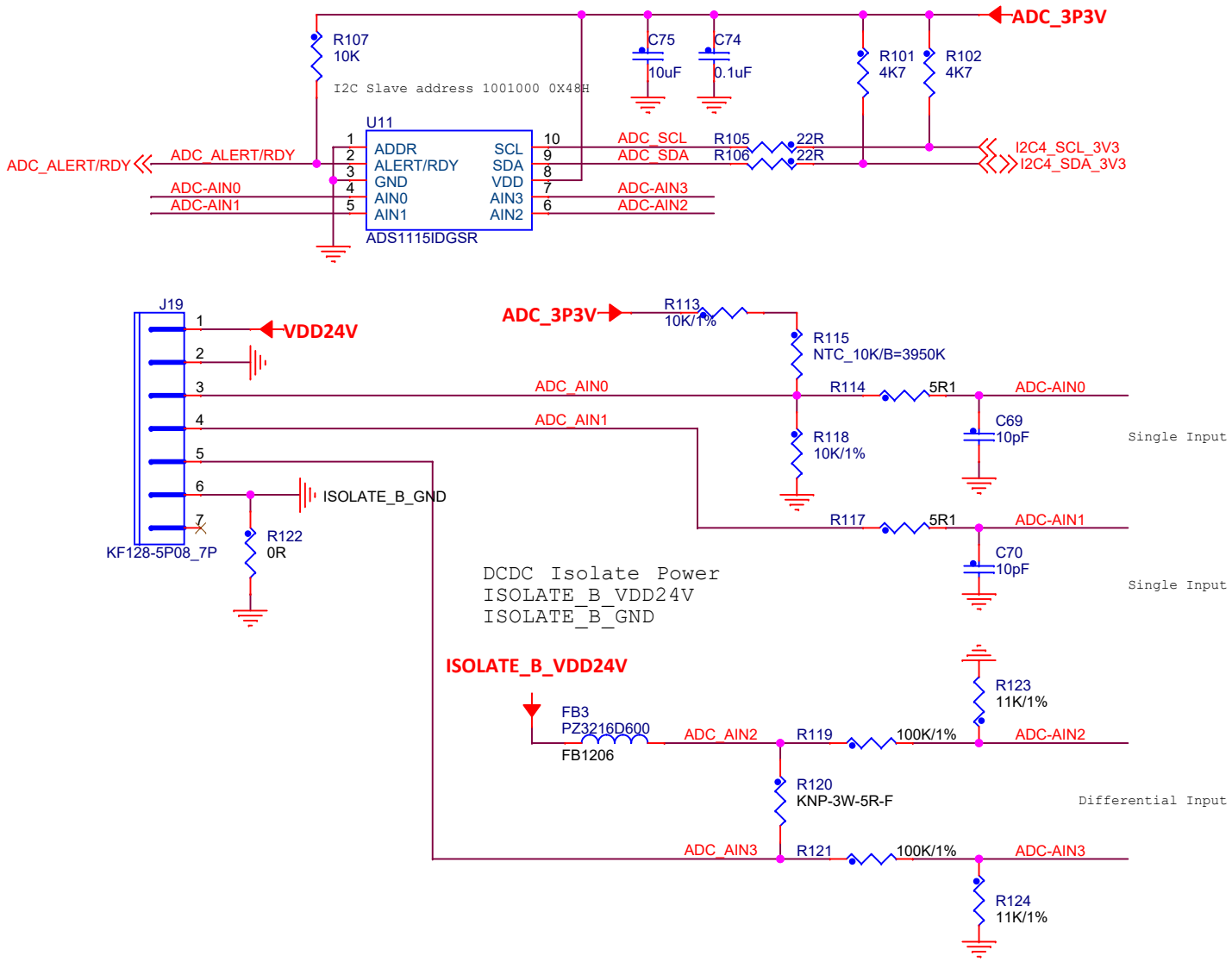
ADC_3P3V
R107
10K
I2C Slave address 1001000 0X48H
C75
10uF
C74
0.1uF
R101
4K7
R102
4K7
U11
ADDR
ALERT/RDY
GND
AIN0
AIN1
SCL
SDA
VDD
AIN3
AIN2
ADS1115IDGSR
ADC_ALERT/RDY
ADC_ALERT/RDY
ADC-AIN0
ADC-AIN1
ADC_SCL
ADC_SDA
R105
R106
22R
22R
I2C4_SCL_3V3
I2C4_SDA_3V3
ADC-AIN3
ADC-AIN2
J19
KF128-5P08_7P
VDD24V
ADC_3P3V
R113
10K/1%
R115
NTC_10K/B=3950K
ADC_AIN0
R114
5R1
ADC-AIN0
C69
10pF
Single Input
ADC_AIN1
R118
10K/1%
ISOLATE_B_GND
R122
0R
R117
5R1
ADC-AIN1
C70
10pF
Single Input
DCDC Isolate Power
ISOLATE_B_VDD24V
ISOLATE_B_GND
ISOLATE_B_VDD24V
FB3
PZ3216D600
FB1206
ADC_AIN2
R119
100K/1%
R123
11K/1%
ADC-AIN2
R120
KNP-3W-5R-F
Differential Input
ADC_AIN3
R121
100K/1%
ADC-AIN3
R124
11K/1%