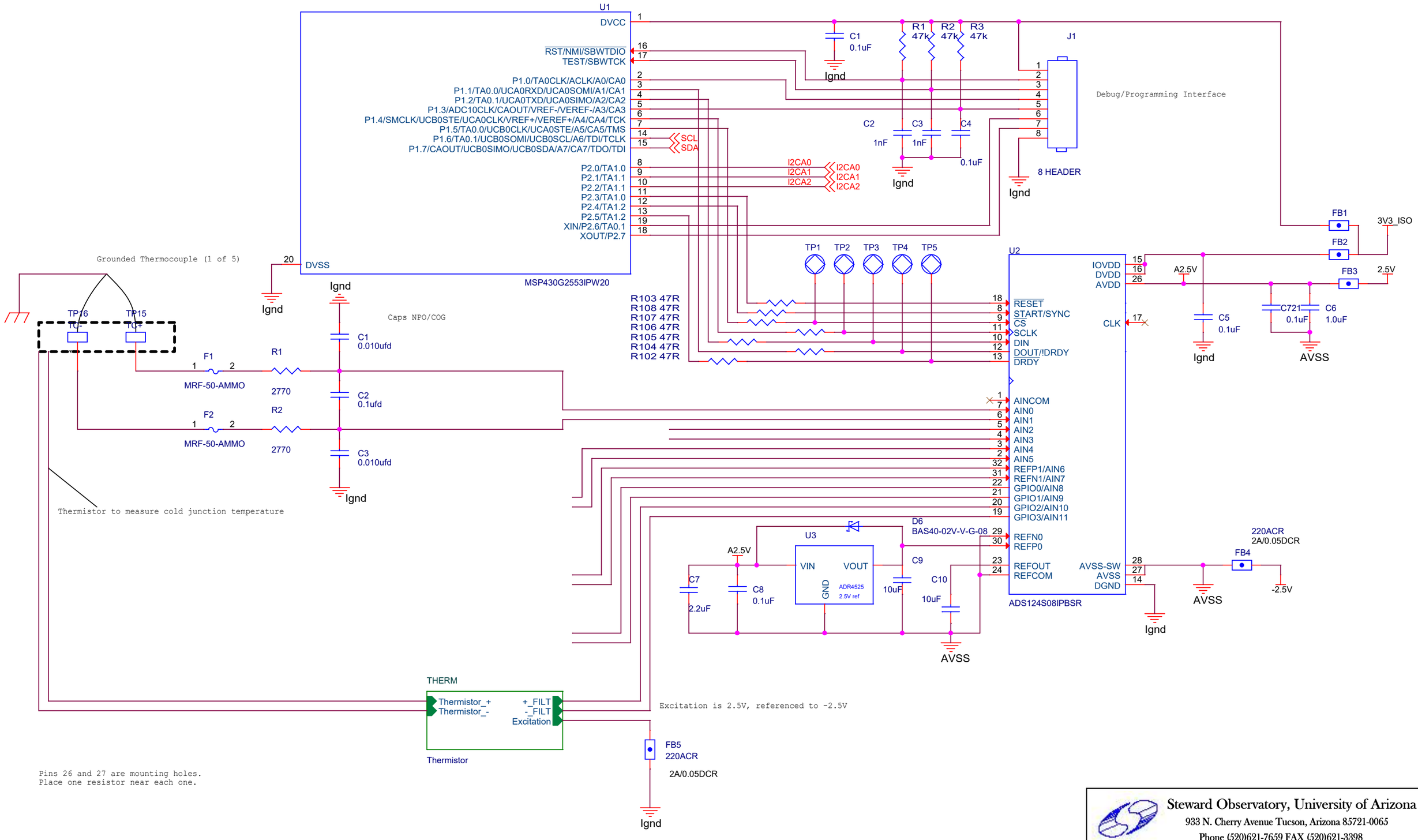

Steward Observatory, University of Arizona
933 N. Cherry Avenue Tucson, Arizona 85721-0065
Phone (520)621-7659 FAX (520)621-3398

Title	Thermal Instrumentation Card	
Size B	Document Number	Rev 0
Date: Thursday, September 24, 2020	Sheet 1 of 8	