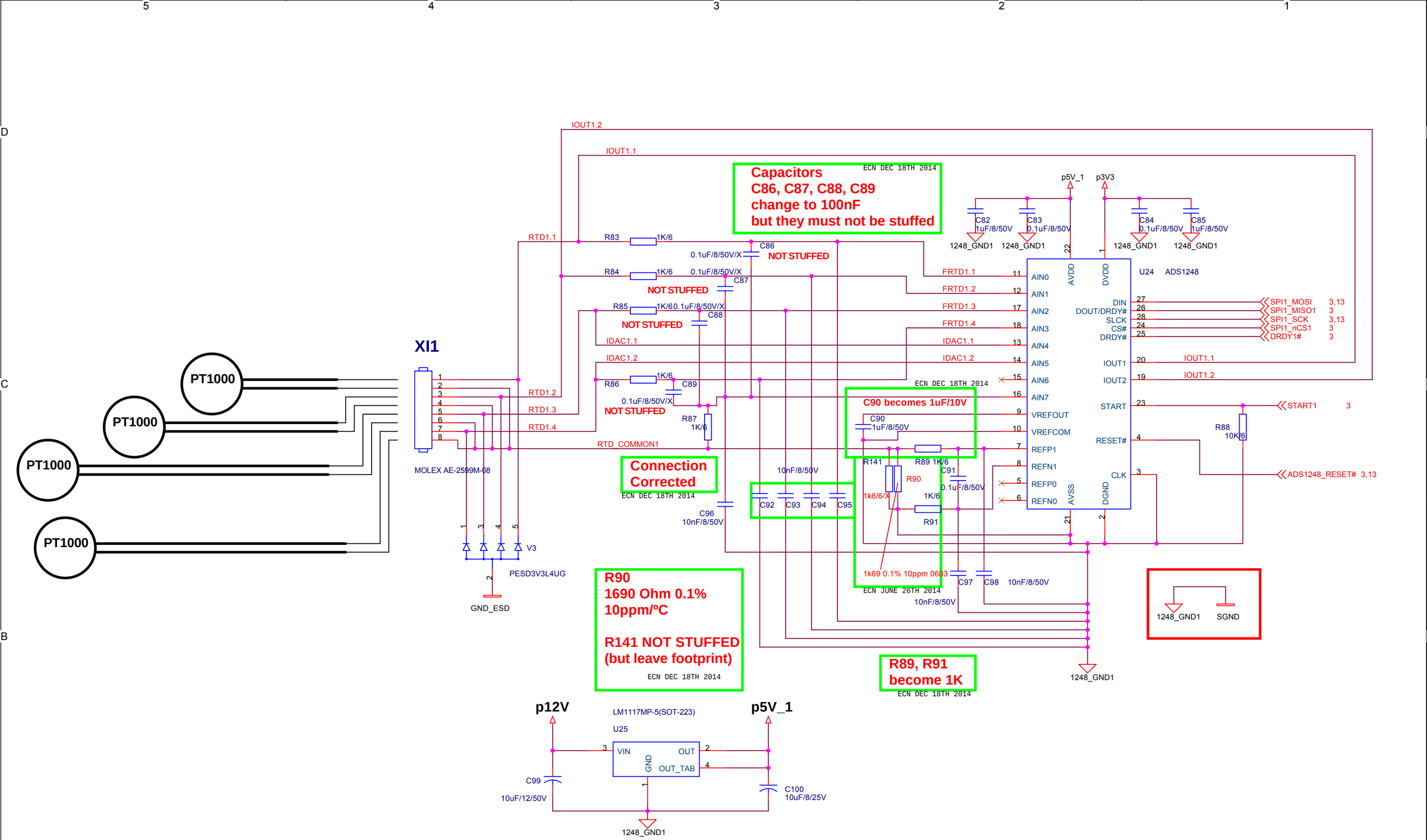

Title	
Size A3	Rev 1.2
Date: Tuesday, January 27, 2015	Sheet 12 of 17