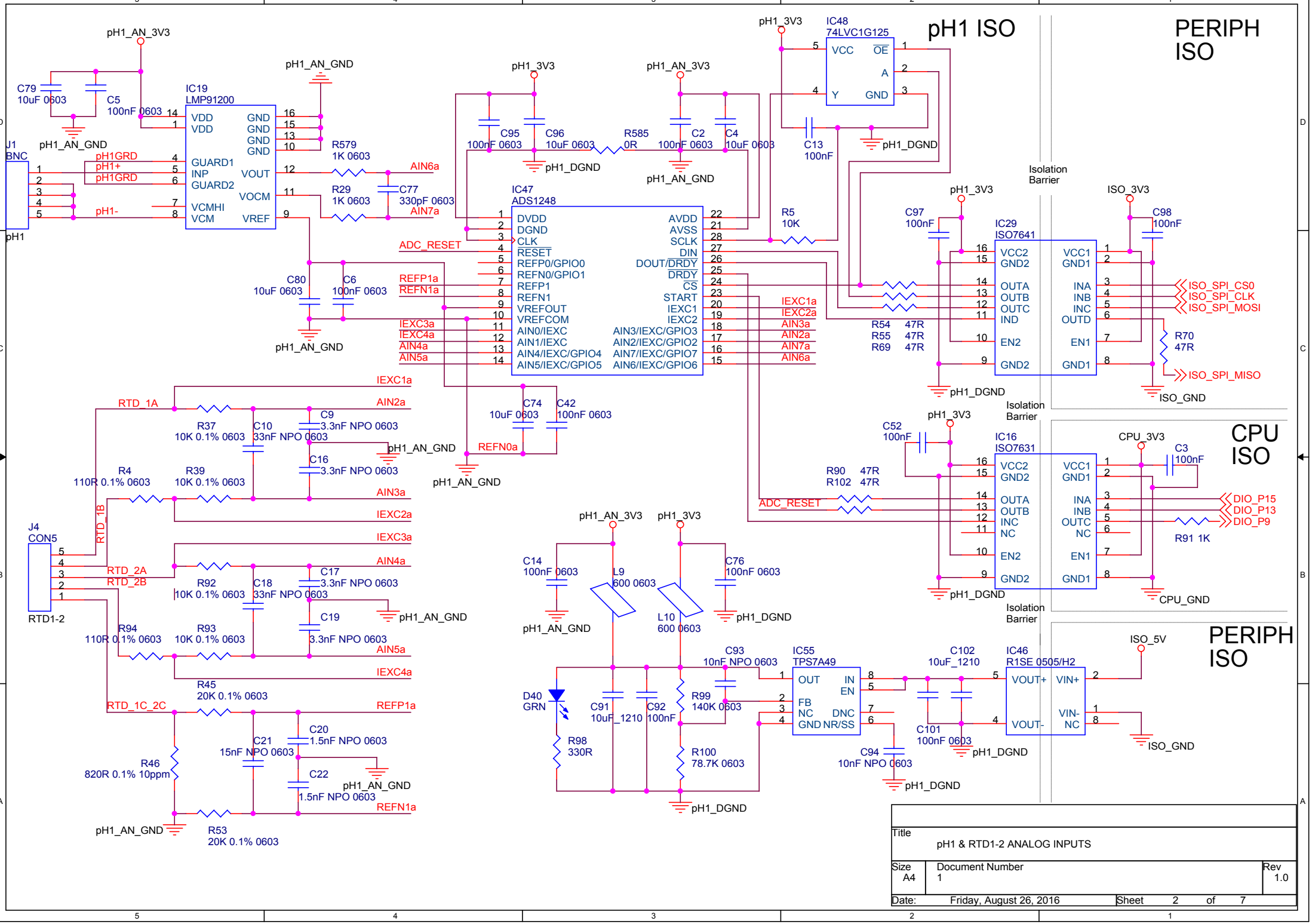
pH1 ISO
PERIPH ISO
CPU ISO
PERIPH ISO
IC19 LMP91200
IC47 ADS1248
IC48 74LVC1G125
IC29 ISO7641
IC16 ISO7631
IC55 TPS7A49
IC46 R1SE 0505/H2
J1 BNC
J4 CON5
RTD1-2
Isolation Barrier
pH1_AN_3V3
pH1_AN_GND
pH1_3V3
pH1_DGND
ISO_3V3
ISO_GND
CPU_3V3
CPU_GND
ISO_5V
ISO_SPI_CS0
ISO_SPI_CLK
ISO_SPI_MOSI
ISO_SPI_MISO
DIO_P15
DIO_P13
DIO_P9
ADC_RESET
AIN6a
AIN7a
AIN2a
AIN3a
AIN4a
AIN5a
IEXC1a
IEXC2a
IEXC3a
IEXC4a
REFP1a
REFN1a
REFN0a
RTD_1A
RTD_1B
RTD_2A
RTD_2B
RTD_1C_2C
Title
pH1 & RTD1-2 ANALOG INPUTS
Size A4
Document Number 1
Rev 1.0
Date: Friday, August 26, 2016
Sheet 2 of 7