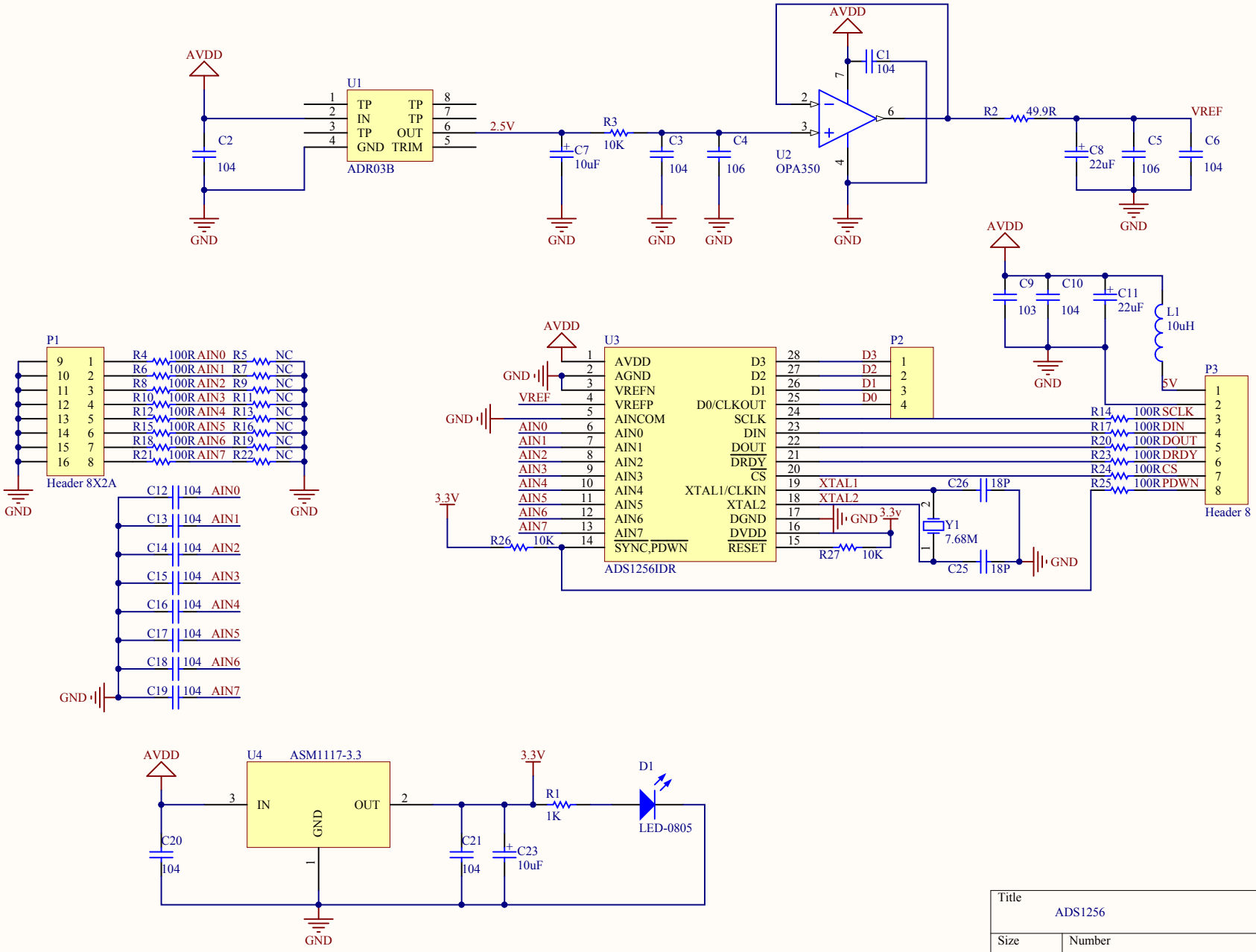

Title ADS1256		
Size A4	Number	Revision censhibo
Date: 2016/10/26		Sheet of
File: C:\Users\..\ADS1256.SchDoc		Drawn By: sunxiao

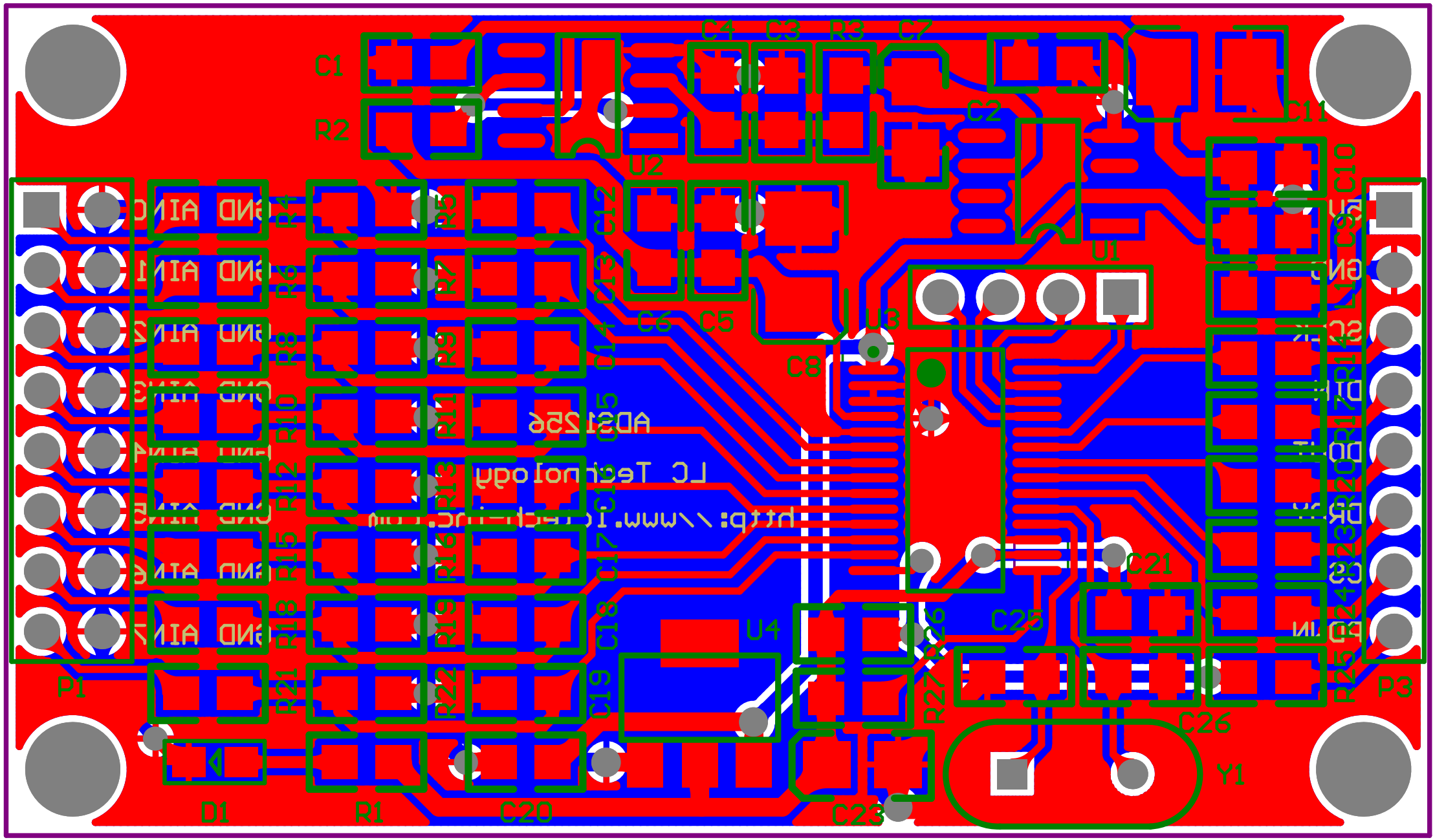
C1
R2
C4
C3
R3
C7
C2
C11
U2
U1
C12
C13
C6
C5
U3
C8
C10
C9
C14
C15
AD5124
LC Technology
http://www.lc-tech-inc.com
C16
C17
C21
C18
U4
C25
C19
C26
Y1
P1
P3
D1
R1
C20
C23