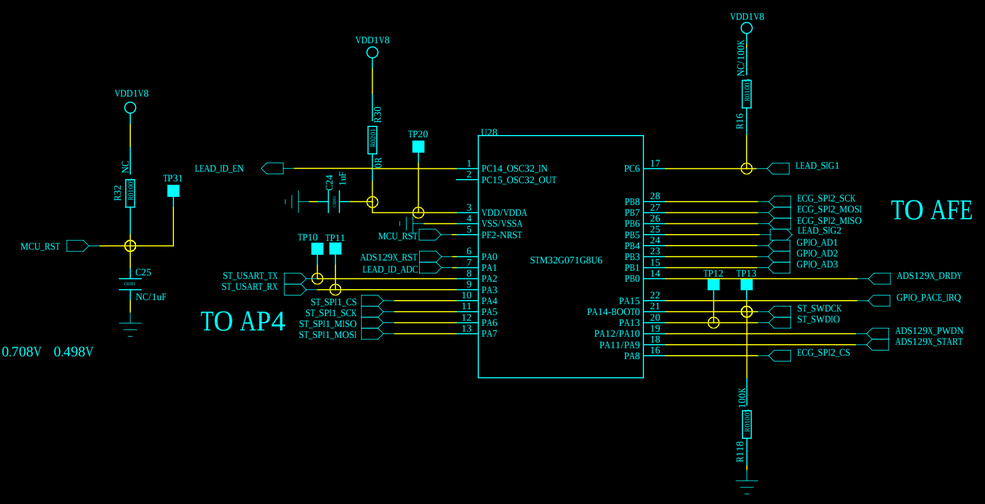

LEAD_ID_ADC 1.8V 0.9V 0.708V 0.498V

Rid NC

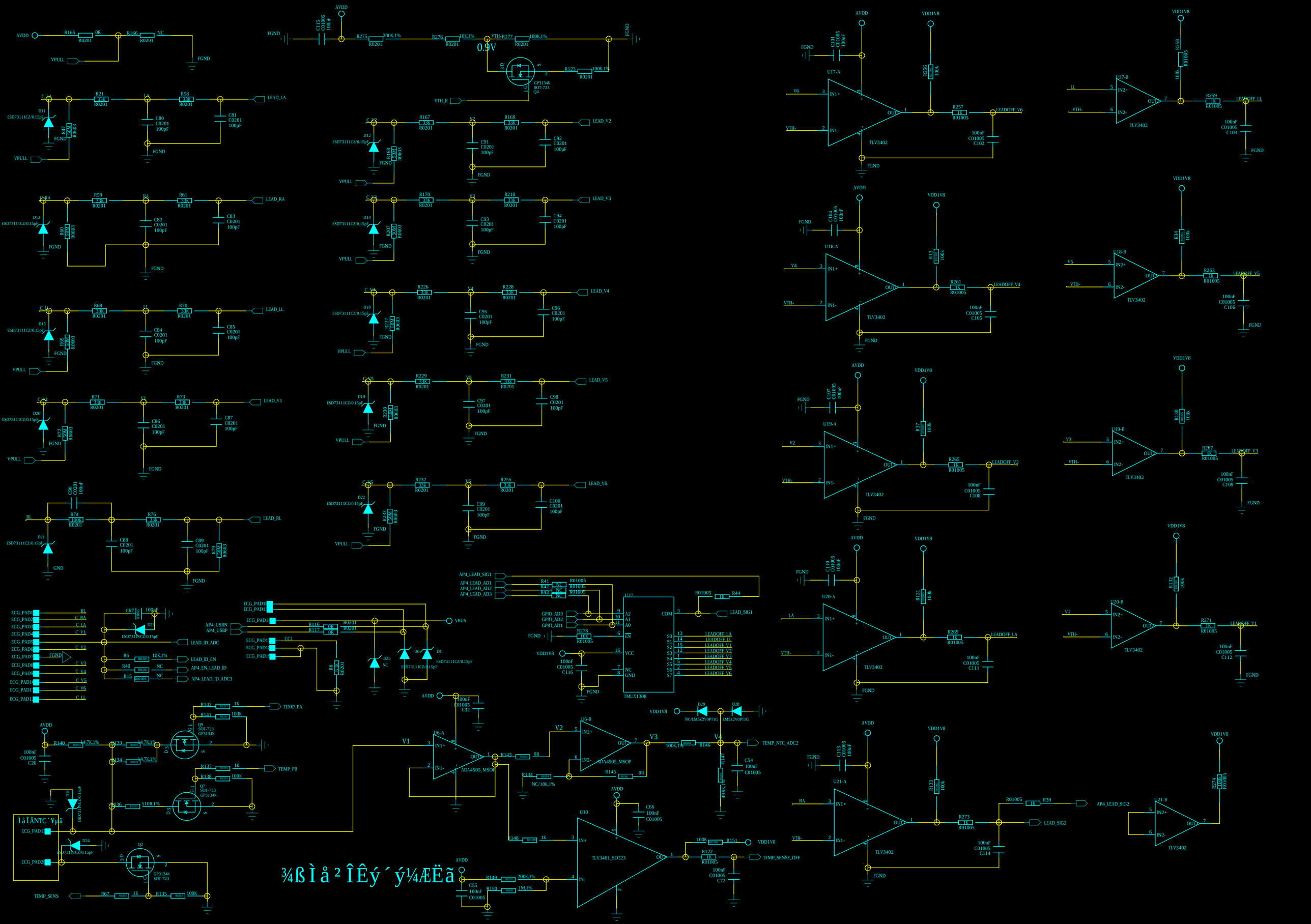
AVDD
VDD1V8
FGND
VPULL
VTH_R
0.9V
GP3134K
SOT-723
LEAD_LA
LEAD_V2
LEAD_RA
LEAD_V3
LEAD_LL
LEAD_V4
LEAD_V1
LEAD_V5
LEAD_RL
LEAD_V6
ESD73111CZ/0.15pF
U17-A
U17-B
U18-A
U18-B
U19-A
U19-B
U20-A
U20-B
U21-A
U21-B
TLV3402
LEADOFF_V6
LEADOFF_LL
LEADOFF_V4
LEADOFF_V5
LEADOFF_V2
LEADOFF_V3
LEADOFF_LA
LEADOFF_V1
AP4_LEAD_SIG1
AP4_LEAD_AD1
AP4_LEAD_AD2
AP4_LEAD_AD3
GPIO_AD3
GPIO_AD2
GPIO_AD1
U27
TMUX1308
LEAD_SIG1
LEADOFF_LA
LEADOFF_LL
LEADOFF_V1
LEADOFF_V2
LEADOFF_V3
LEADOFF_V4
LEADOFF_V5
LEADOFF_V6
ECG_PAD1
ECG_PAD2
ECG_PAD3
ECG_PAD4
ECG_PAD5
ECG_PAD6
ECG_PAD7
ECG_PAD8
ECG_PAD9
ECG_PAD11
ECG_PAD12
RL
C_RA
C_LA
C_V1
C_V2
C_V3
C_V4
C_V5
C_V6
C_LL
LEAD_ID_ADC
LEAD_ID_EN
AP4_EN_LEAD_ID
AP4_LEAD_ID_ADC3
AP4_USBN
AP4_USBP
VBUS
CC1
TEMP_PA
TEMP_PB
TEMP_NTC_ADC2
TEMP_SENSE_OFF
AP4_LEAD_SIG2
LEAD_SIG2
TEMP_SENS
Q9
SOT-723
GP3134K
Q7
SOT-723
GP3134K
Q2
SOT-723
GP3134K
U6-A
U6-B
ADA4505_MSOP
U10
TLV3401_SOT23
V1
V2
V3
V4
V5
V6
NC/10K,1%
NC/LM5Z2V0PT1G
LM5Z2V0PT1G
409K,1%
¾ßÌå²ÎÊý´ý¼ÆËã

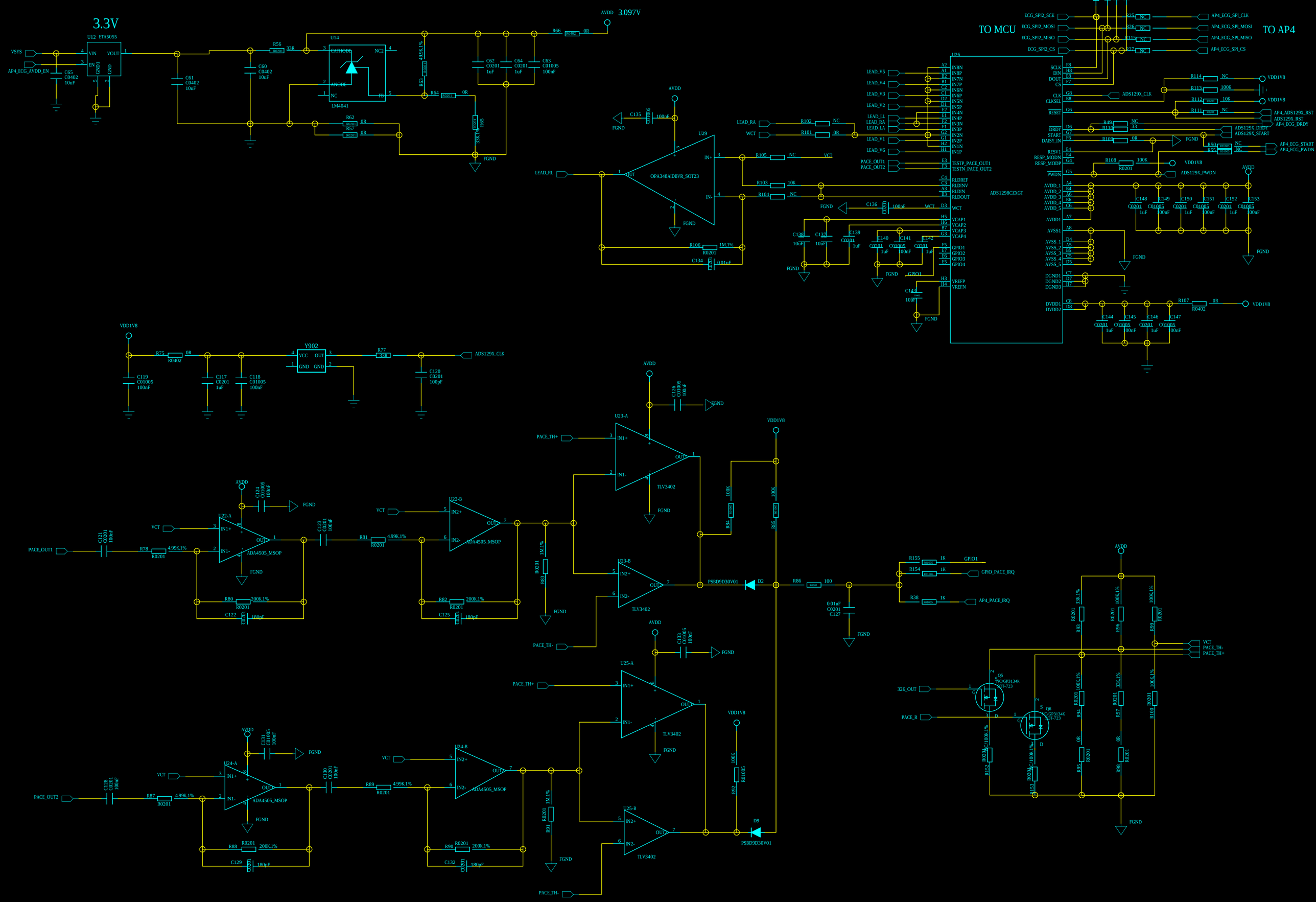
3.3V
U12_ETA5055
VSYS
AP4_ECG_AVDD_EN
C65 C0402 10uF
C61 C0402 10uF
C60 C0402 10uF
R56 R0201 33R
U14
CATHODE
NC2
ANODE
NC
FB
LM4041
R62 R0201 0R
R57 R0201 0R
R63 R0201 499K,1%
R64 R0201 0R
R65 R0201 33K,1%
C62 C0201 1uF
C64 C0201 1uF
C63 C01005 100nF
R66 R0402 0R
AVDD 3.097V
FGND
TO MCU
TO AP4
ECG_SPI2_SCK
ECG_SPI2_MOSI
ECG_SPI2_MISO
ECG_SPI2_CS
AP4_ECG_SPI_CLK
AP4_ECG_SPI_MOSI
AP4_ECG_SPI_MISO
AP4_ECG_SPI_CS
U26
ADS1298CZXGT
LEAD_V5
LEAD_V4
LEAD_V3
LEAD_V2
LEAD_LL
LEAD_RA
LEAD_LA
LEAD_V1
LEAD_V6
PACE_OUT1
PACE_OUT2
SCLK
DIN
DOUT
CS
CLK
CLKSEL
RESET
DRDY
START
DAISY_IN
RESV1
RESP_MODN
RESP_MODP
PWDN
ADS129X_CLK
ADS129X_DRDY
ADS129X_START
ADS129X_PWDN
AP4_ADS129X_RST
ADS129X_RST
AP4_ECG_DRDY
AP4_ECG_START
AP4_ECG_PWDN
VDD1V8
LEAD_RA
WCT
LEAD_RL
U29
OPA348AIDBVR_SOT23
IN+
IN-
OUT
R102 NC
R101 0R
R105 NC VCT
R103 10K
R104 NC
R106 R0201 1M,1%
C134 C01005 0.01uF
C135 C01005 100nF
C136 C01005 100nF
C137 100nF
C138 100nF
C139 C0201 1uF
C140 C0201 1uF
C141 C01005 100nF
C142 C0201 1uF
C143 100nF
GPIO1
TESTP_PACE_OUT1
TESTN_PACE_OUT2
RLDREF
RLDINV
RLDIN
RLDOUT
WCT
VCAP1
VCAP2
VCAP3
VCAP4
GPIO1
GPIO2
GPIO3
GPIO4
VREFP
VREFN
R114 NC
R113 100K
R112 R0201 10K
R111 R0201 NC
R49 NC
R110 33
R109 0R
R50 R01005 NC
R51 R01005 NC
R108 R0201 100K
R107 R0402 0R
C148 C0201 1uF
C149 C01005 100nF
C150 C0201 1uF
C151 C01005 100nF
C152 C0201 1uF
C153 C01005 100nF
C144 C0201 1uF
C145 C01005 100nF
C146 C0201 1uF
C147 C01005 100nF
R75 R0402 0R
C119 C01005 100nF
C117 C0201 1uF
C118 C01005 100nF
Y902
VCC
OUT
GND
R77 33R
C120 C0201 100pF
ADS129X_CLK
C126 C01005 100nF
U23-A
PACE_TH+
IN1+
IN1-
TLV3402
R84 R01005 100K
R85 R01005 100K
U22-A
U22-B
U23-B
U24-A
U24-B
U25-A
U25-B
ADA4505_MSOP
PACE_OUT1
PACE_OUT2
VCT
PACE_TH-
C121 C0201 100nF
C122 C0201 180pF
C123 C0201 100nF
C124 C01005 100nF
R78 R0201 4.99K,1%
R80 R0201 200K,1%
R81 R0201 4.99K,1%
R82 R0201 200K,1%
C125 C0201 180pF
R83 R0201 1M,1%
PSBD9D30V01
D2
R86 R0201 100
0.01uF C0201 C127
R155 R01005 1K
R154 R01005 1K
R38 R01005 1K
GPIO1
GPIO_PACE_IRQ
AP4_PACE_IRQ
C128 C0201 100nF
C129 C0201 180pF
C130 C0201 100nF
C131 C01005 100nF
C132 C0201 180pF
C133 C01005 100nF
R87 R0201 4.99K,1%
R88 R0201 200K,1%
R89 R0201 4.99K,1%
R90 R0201 200K,1%
R91 R0201 1M,1%
R92 R01005 100K
D9
32K_OUT
PACE_R
Q5 NC/GP3134K SOT-723
Q6 NC/GP3134K SOT-723
R152 R0201 100K,1%
R153 R0201 100K,1%
R33 R0201 33K,1%
R36 R0201 100K,1%
R99 R0201 100K,1%
R34 R0201 100K,1%
R37 R0201 33K,1%
R100 R0201 100K,1%
R35 R0201 0R
R98 R0201 0R