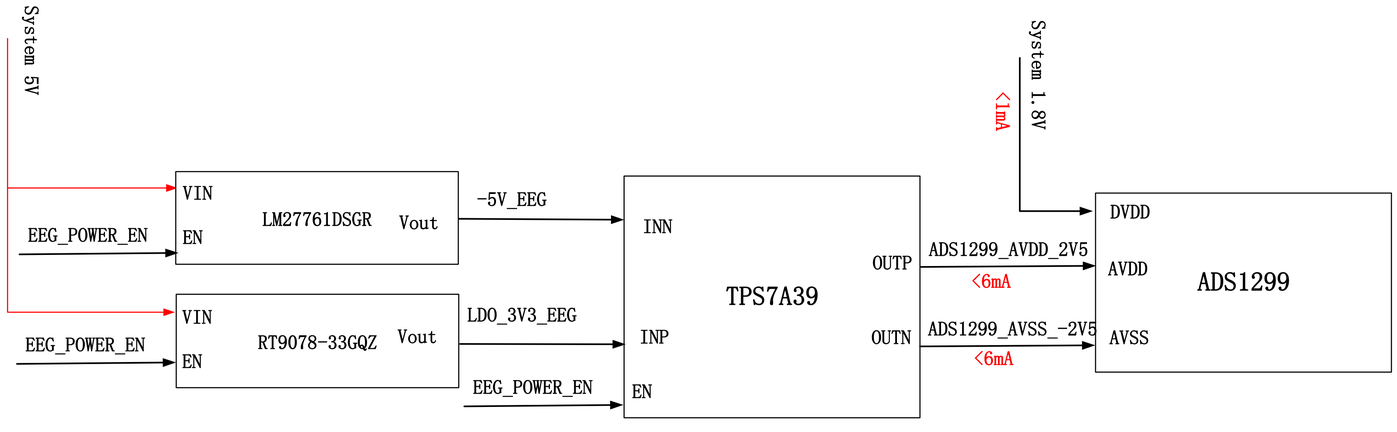
System 5V
System 1.8V
<1mA
VIN
EN
LM27761DSGR
Vout
EEG_POWER_EN
-5V_EEG
VIN
EN
RT9078-33GQZ
Vout
EEG_POWER_EN
LDO_3V3_EEG
INN
INP
EN
TPS7A39
OUTP
OUTN
ADS1299_AVDD_2V5
<6mA
ADS1299_AVSS_-2V5
<6mA
DVDD
AVDD
AVSS
ADS1299

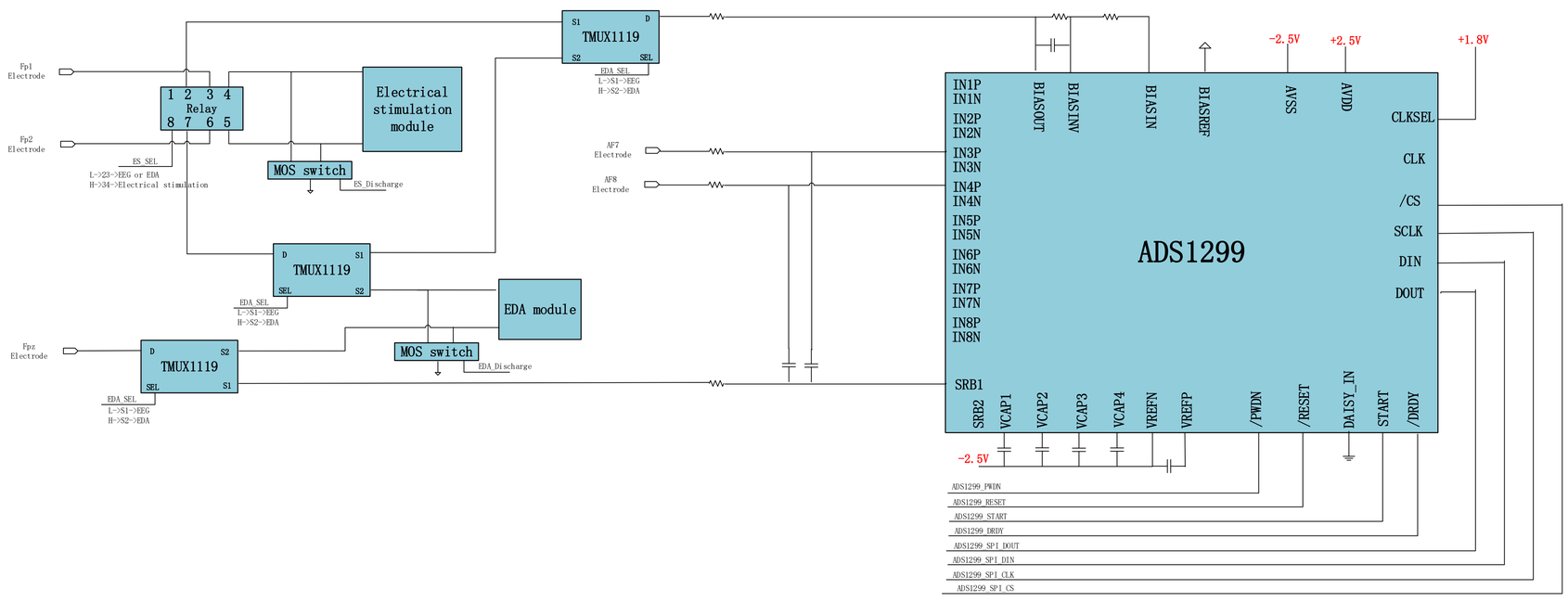
Fp1 Electrode
Fp2 Electrode
1 2 3 4
Relay
8 7 6 5
ES_SEL
L->23->EEG or EDA
H->34->Electrical stimulation
Electrical stimulation module
MOS switch
ES_Discharge
S1
D
TMUX1119
S2
SEL
EDA_SEL
L->S1->EEG
H->S2->EDA
D
S1
TMUX1119
SEL
S2
EDA_SEL
L->S1->EEG
H->S2->EDA
EDA module
Fpz Electrode
D
S2
TMUX1119
SEL
S1
EDA_SEL
L->S1->EEG
H->S2->EDA
MOS switch
EDA_Discharge
AF7 Electrode
AF8 Electrode
-2.5V
+2.5V
+1.8V
IN1P
IN1N
IN2P
IN2N
IN3P
IN3N
IN4P
IN4N
IN5P
IN5N
IN6P
IN6N
IN7P
IN7N
IN8P
IN8N
SRB1
SRB2
BIASOUT
BIASINV
BIASIN
BIASREF
AVSS
AVDD
CLKSEL
CLK
/CS
SCLK
DIN
DOUT
VCAP1
VCAP2
VCAP3
VCAP4
VREFN
VREFP
/PWDN
/RESET
DAISY_IN
START
/DRDY
ADS1299
-2.5V
ADS1299_PWDN
ADS1299_RESET
ADS1299_START
ADS1299_DRDY
ADS1299_SPI_DOUT
ADS1299_SPI_DIN
ADS1299_SPI_CLK
ADS1299_SPI_CS