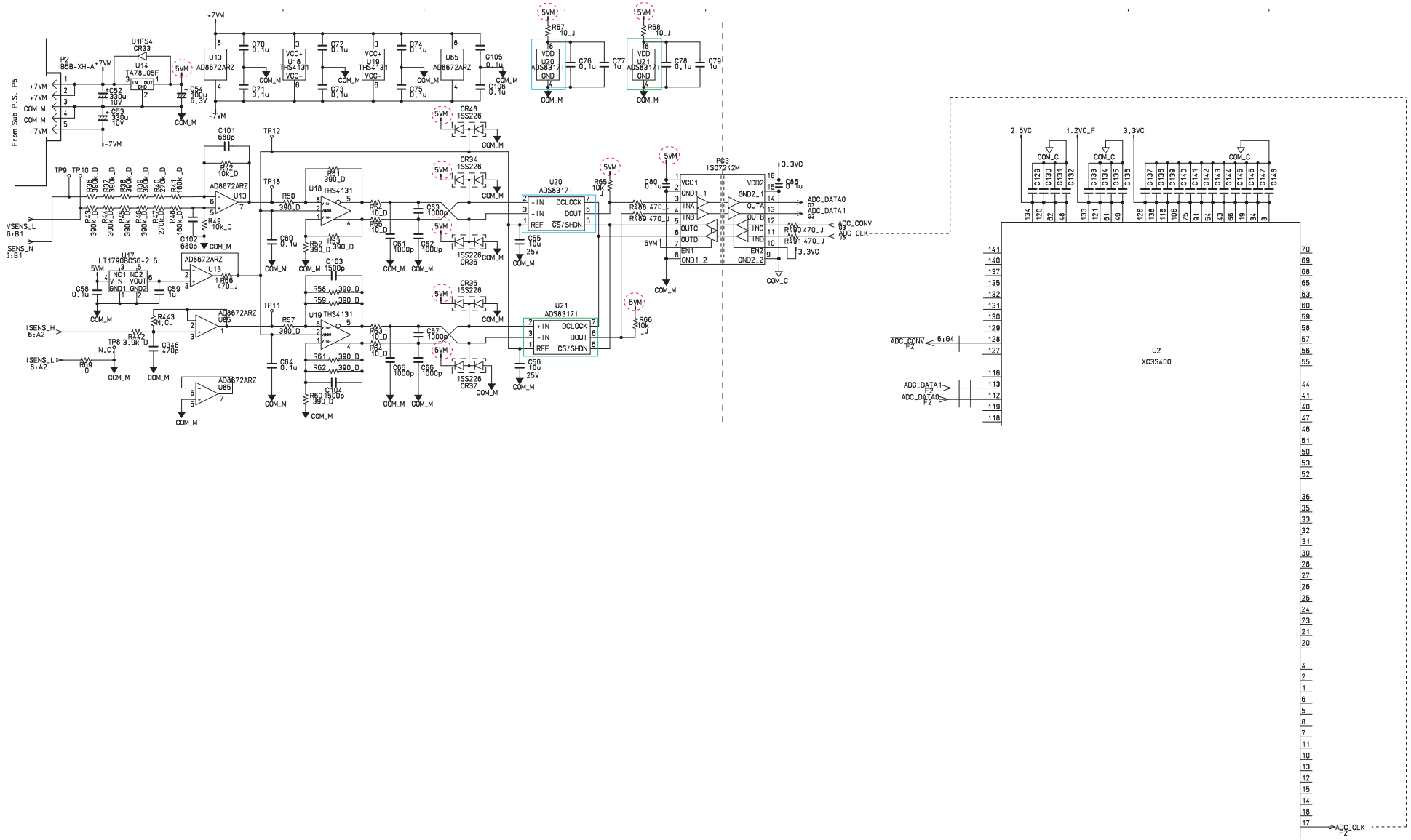
From Sub P.S. P5
P2
B5B-XH-A
D1FS4
CR33
U14
TA78L05F
U13
AD8672ARZ
U18
THS4131
U19
U85
U17
LT1790BCS6-2.5
U20
ADS8317I
U21
ADS8317I
P63
ISO7242M
U2
XC3S400
ADC_DATA0
ADC_DATA1
ADC_CONV
ADC_CLK
2.5VC
1.2VC_F
3.3VC
COM_M
COM_C
+7VM
-7VM
5VM