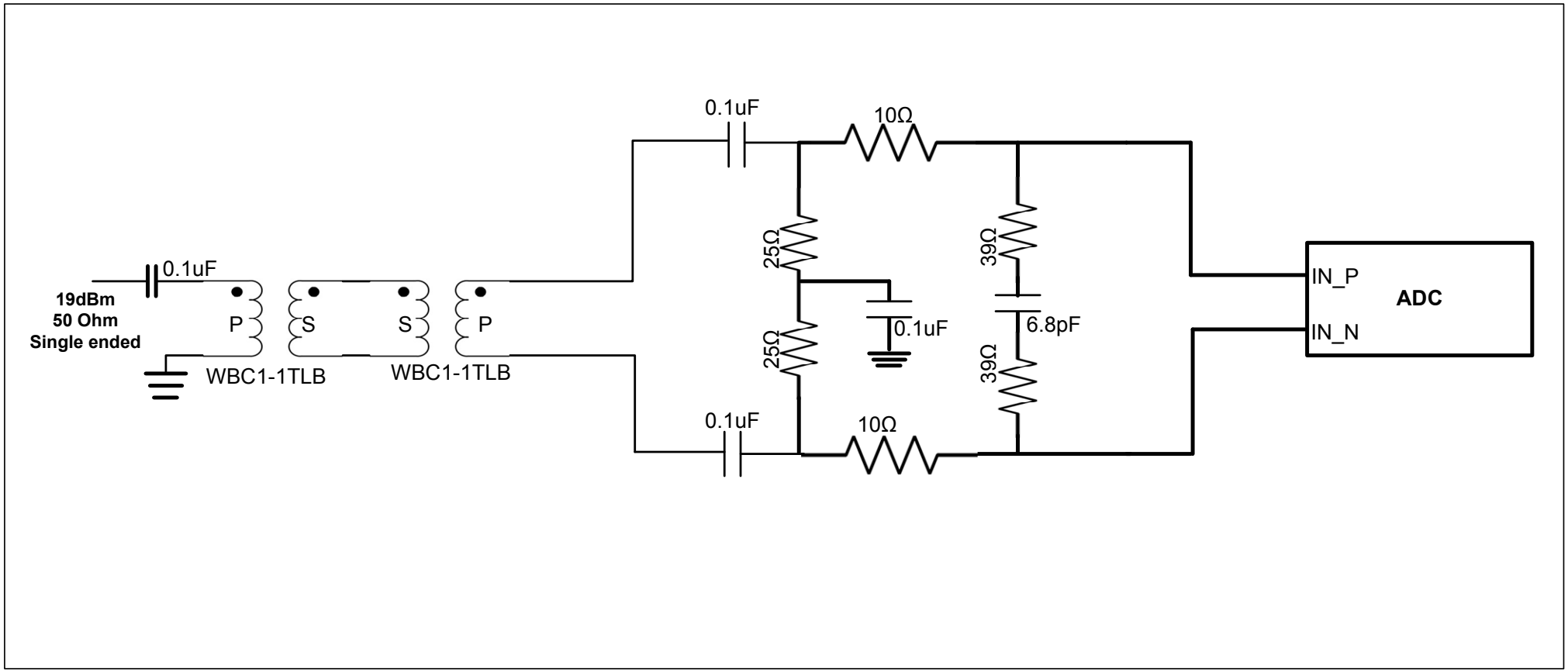
0.1uF
19dBm
50 Ohm
Single ended
P
S
S
P
WBC1-1TLB
WBC1-1TLB
0.1uF
10Ω
25Ω
25Ω
0.1uF
39Ω
6.8pF
39Ω
0.1uF
10Ω
IN_P
IN_N
ADC