REVISION RECORD			
LTR	ECO NO:	APPROVED:	DATE:

PPG Sensor

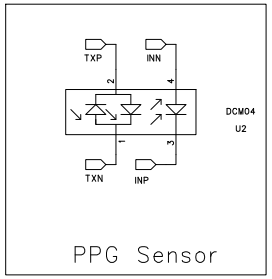

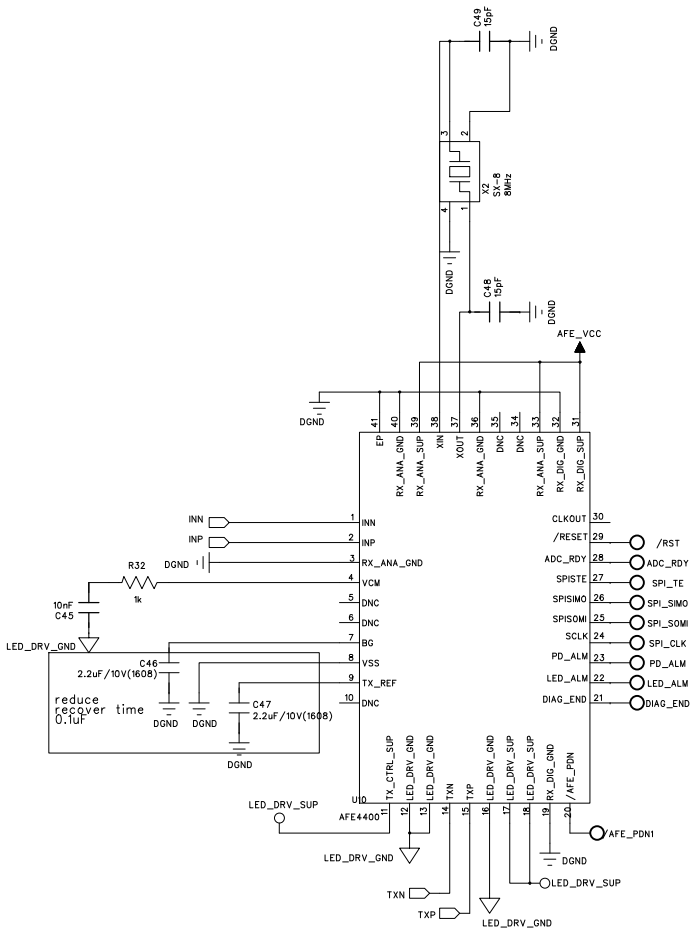

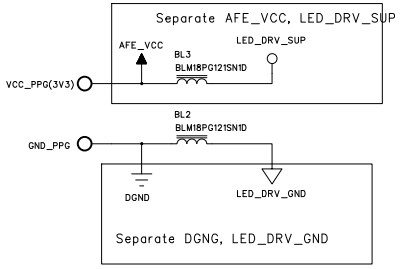

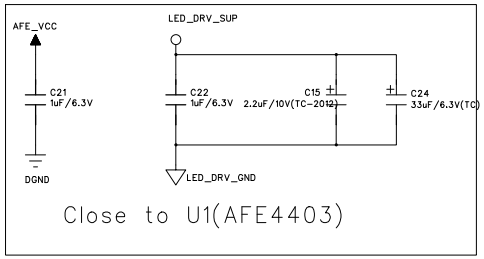

COMPANY: Yu jeong system				
TITLE: PPG Sensor				
DRAWN: Drawn By	DATED: Drawn Date	CODE: Code	SIZE: A4	DRAWING NO: Wearable device	REV: 1.0
CHECKED: Checked By	DATED: Checked Date			
QUALITY CONTROL: QC By	DATED: QC Date			
RELEASED: Released By	DATED: Release Date	SCALE: Scale		SHEET: 2 OF 7