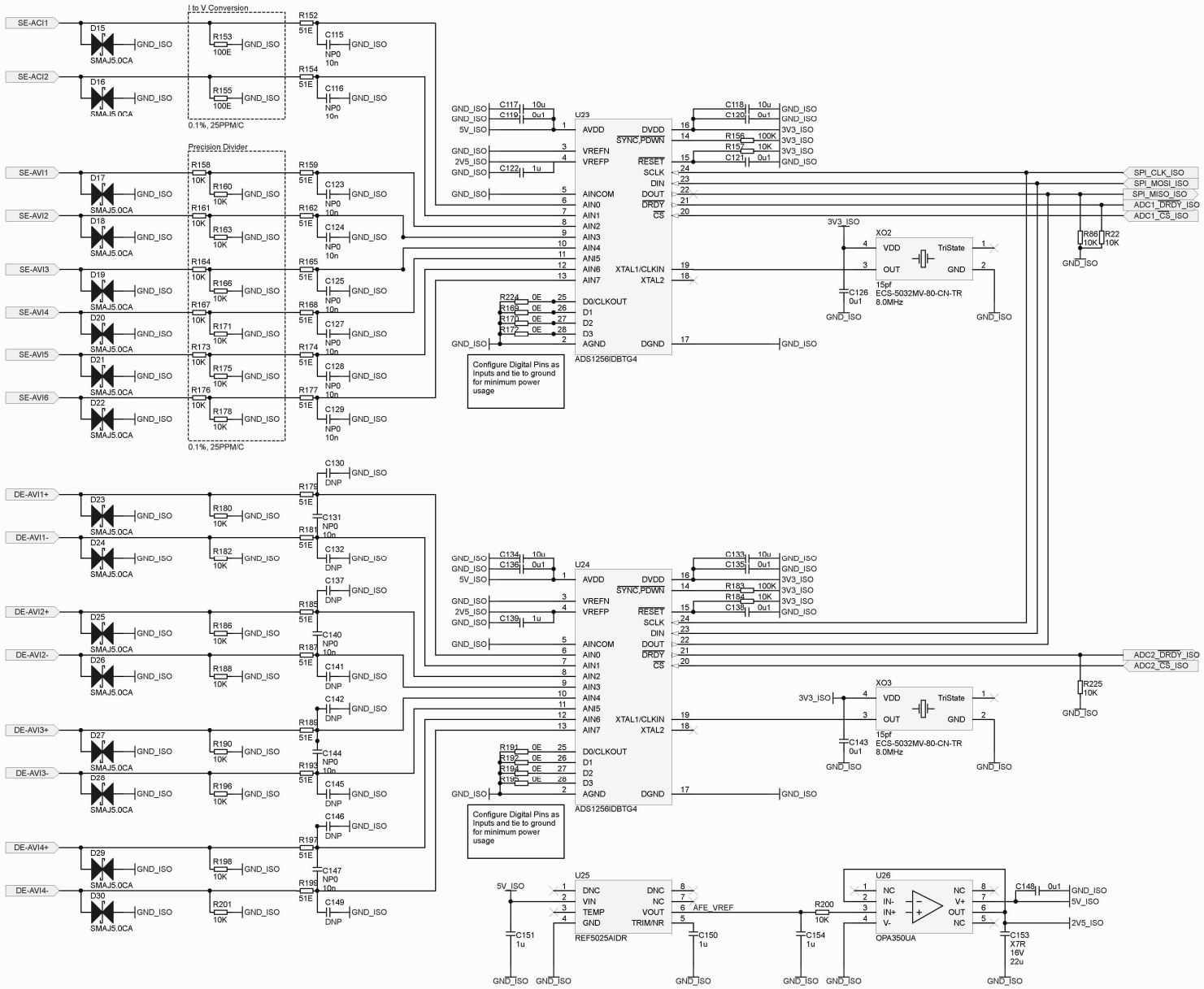

Title	SASE Datalogger	File: AFE.SchDoc		
Size: A3	Rev: 0.3	Date: 05 Jun 2020	Sheet 9 of 11	m2mLOGGER