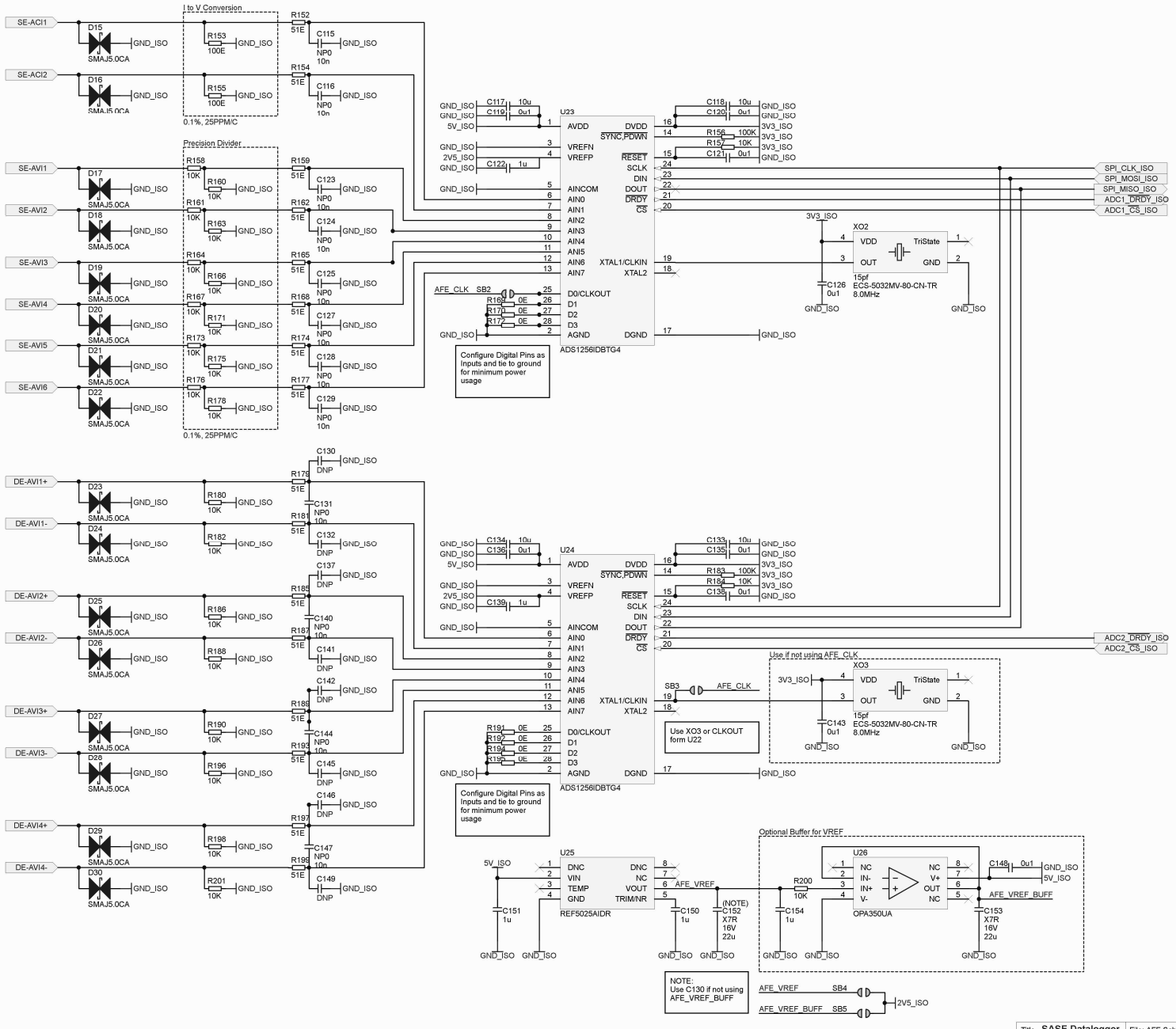


| Title | SASE Datalogger | File: AFE.SchDoc | |
|---|---|---|---|
| Size: A3 | Rev: 0.3 | Date: 05 Jun 2020 | Sheet 9 of 11 |

M2MLOGGER