Analog Inputs

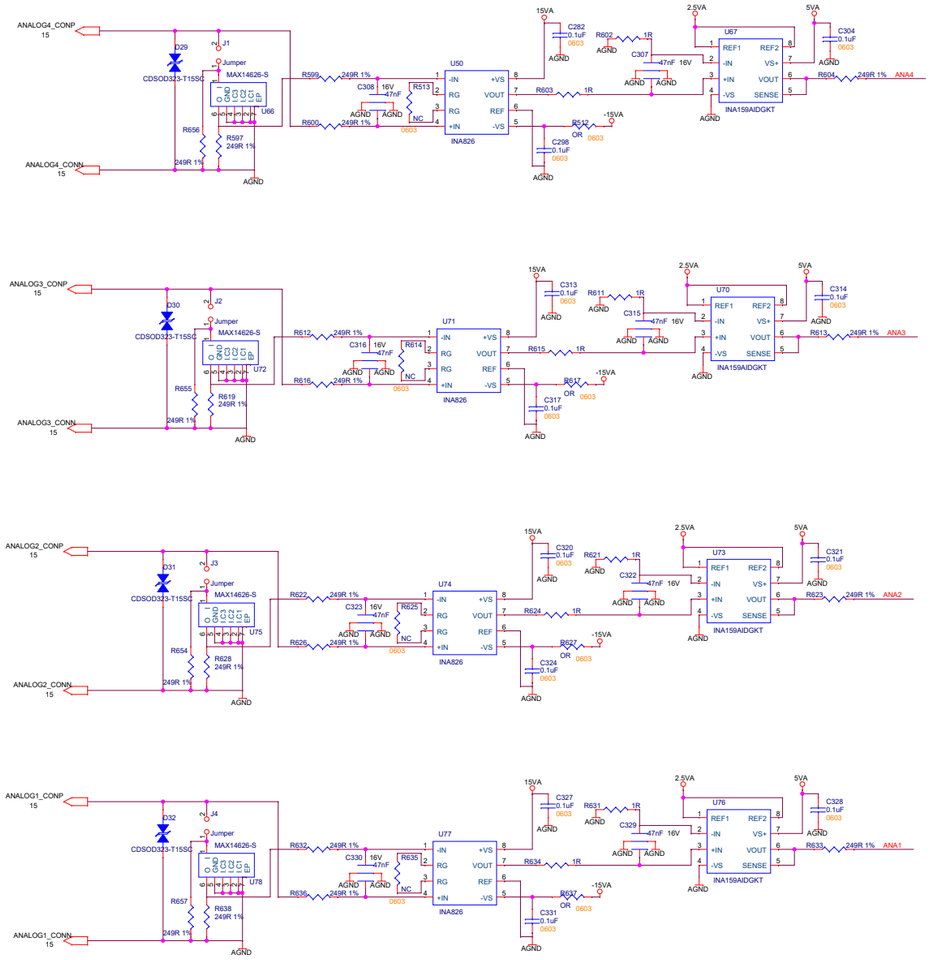

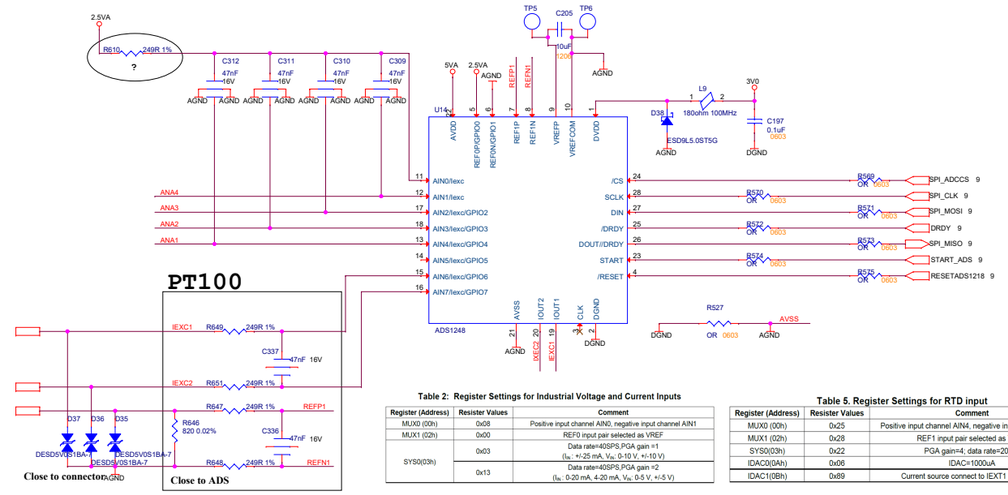

Table 2: Register Settings for Industrial Voltage and Current Inputs

Register (Address)	Resister Values	Comment
MUX0 (00h)	0x08	Positive input channel AIN0, negative input channel AIN1
MUX1 (02h)	0x00	REF0 input pair selected as VREF
SYS0(03h)	0x03	Data rate=40SPS,PGA gain =1 (I_{ex} : +/-25 mA, V_{in}: 0-10 V, +/-10 V)
	0x13	Data rate=40SPS,PGA gain =2 (I_{ex} : 0-20 mA, 4-20 mA, V_{in}: 0-5 V, +/-5 V)

Table 5. Register Settings for RTD input
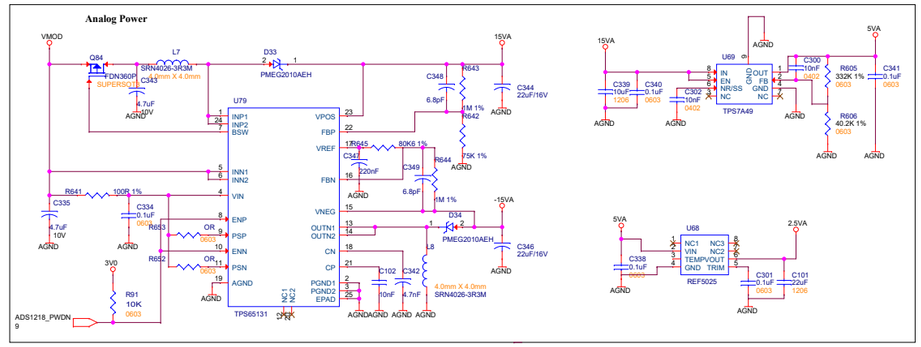
Register (Address)	Resister Values	Comment
MUX0 (00h)	0x25	Positive input channel AIN4, negative input channel AIN5
MUX1 (02h)	0x28	REF1 input pair selected as VREF
SYS0(03h)	0x22	PGA gain=4; data rate=20sps
IDAC0(0Ah)	0x06	IDAC=1000uA
IDAC1(0Bh)	0x89	Current source connect to IEXT1 and IEXT2