ADC SECTION

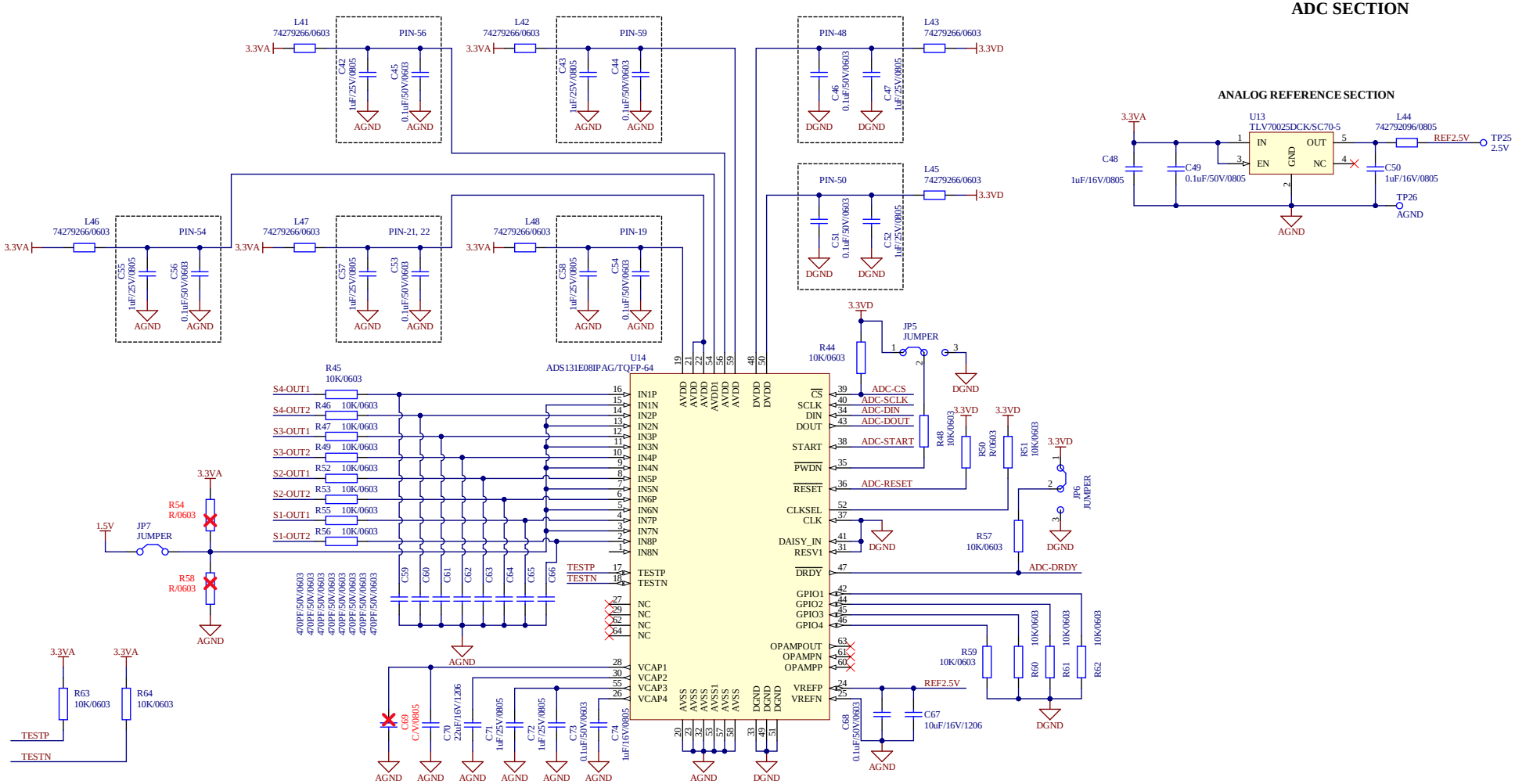
ANALOG REFERENCE SECTION
U13
TLV70025DCK/SC70-5
IN
OUT
EN
GND
NC
L41
74279266/0603
L42
74279266/0603
L43
74279266/0603
L44
742792096/0805
L45
74279266/0603
L46
74279266/0603
L47
74279266/0603
L48
74279266/0603
PIN-56
PIN-59
PIN-48
PIN-50
PIN-54
PIN-21, 22
PIN-19
3.3VA
3.3VD
REF2.5V
TP25
2.5V
TP26
AGND
DGND
U14
ADS131E08IPAG/TQFP-64
IN1P
IN1N
IN2P
IN2N
IN3P
IN3N
IN4P
IN4N
IN5P
IN5N
IN6P
IN6N
IN7P
IN7N
IN8P
IN8N
TESTP
TESTN
NC
VCAP1
VCAP2
VCAP3
VCAP4
AVDD
AVSS
DVDD
DGND
CS
SCLK
DIN
DOUT
START
PWDN
RESET
CLKSEL
CLK
DAISY_IN
RESV1
DRDY
GPIO1
GPIO2
GPIO3
GPIO4
OPAMPOUT
OPAMPN
OPAMPP
VREFP
VREFN
ADC-CS
ADC-SCLK
ADC-DIN
ADC-DOUT
ADC-START
ADC-RESET
ADC-DRDY
S4-OUT1
S4-OUT2
S3-OUT1
S3-OUT2
S2-OUT1
S2-OUT2
S1-OUT1
S1-OUT2
JP5
JUMPER
JP6
JUMPER
JP7
JUMPER
1.5V
R44
10K/0603
R45
10K/0603
R46
10K/0603
R47
10K/0603
R48
10K/0603
R49
10K/0603
R50
R/0603
R51
10K/0603
R52
10K/0603
R53
10K/0603
R54
R/0603
R55
10K/0603
R56
10K/0603
R57
10K/0603
R58
R/0603
R59
10K/0603
R60
10K/0603
R61
10K/0603
R62
10K/0603
R63
10K/0603
R64
10K/0603
C42
1uF/25V/0805
C43
1uF/25V/0805
C44
0.1uF/50V/0603
C45
0.1uF/50V/0603
C46
0.1uF/50V/0603
C47
1uF/25V/0805
C48
1uF/16V/0805
C49
0.1uF/50V/0805
C50
1uF/16V/0805
C51
0.1uF/50V/0603
C52
1uF/25V/0805
C53
0.1uF/50V/0603
C54
0.1uF/50V/0603
C55
1uF/25V/0805
C56
0.1uF/50V/0603
C57
1uF/25V/0805
C58
1uF/25V/0805
C59
C60
C61
C62
C63
C64
C65
C66
470PF/50V/0603
C67
10uF/16V/1206
C68
0.1uF/50V/0603
C69
C/V/0805
C70
22uF/16V/1206
C71
1uF/25V/0805
C72
1uF/25V/0805
C73
0.1uF/50V/0603
C74
1uF/16V/0805