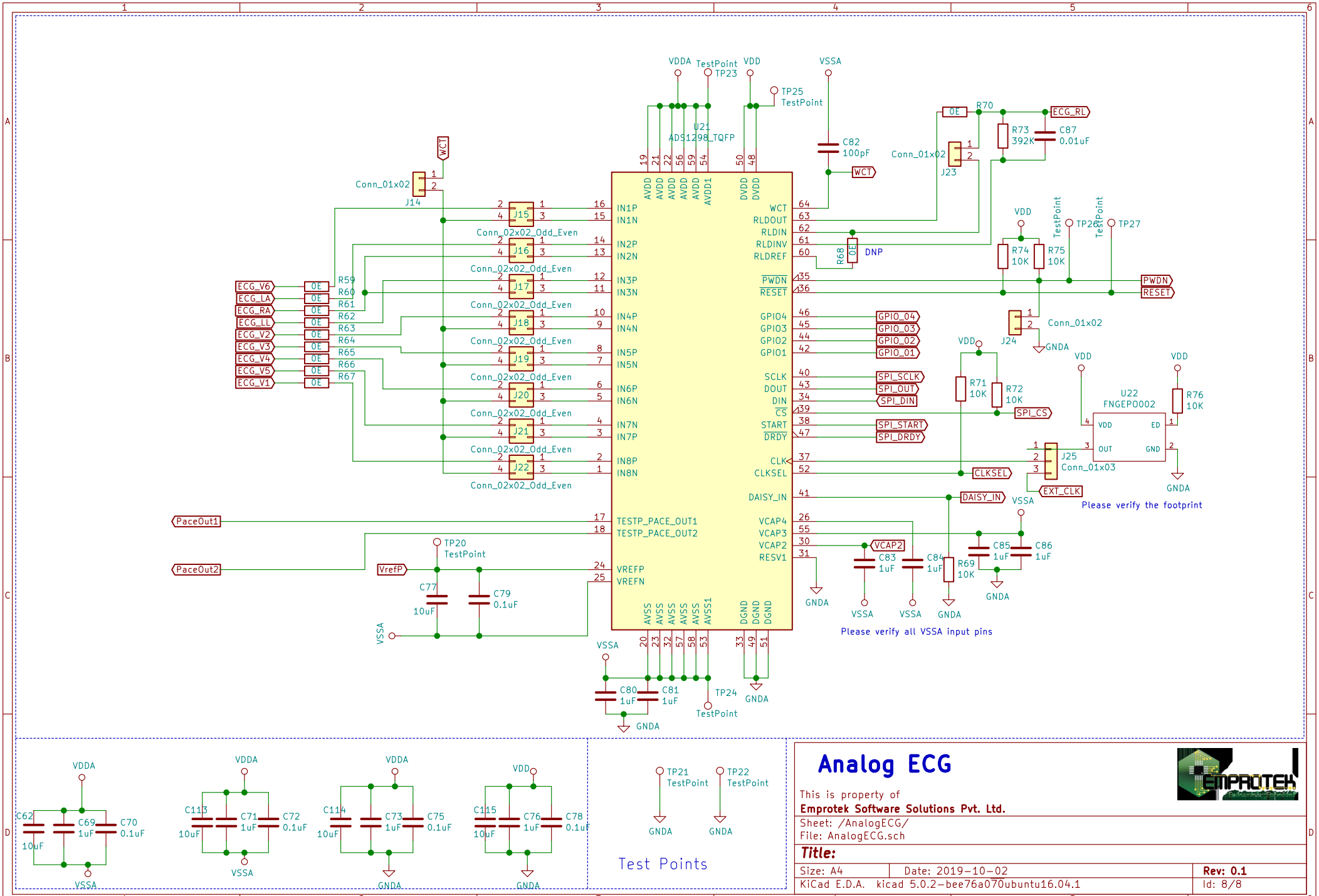
U21
ADS1298_TQFP
VDDA
TestPoint
TP23
VDD
TP25
TestPoint
VSSA
C82
100pF
WCT
Conn_01x02
J14
J15
J16
J17
J18
J19
J20
J21
J22
Conn_02x02_Odd_Even
ECG_V6
ECG_LA
ECG_RA
ECG_LL
ECG_V2
ECG_V3
ECG_V4
ECG_V5
ECG_V1
R59
R60
R61
R62
R63
R64
R65
R66
R67
0E
IN1P
IN1N
IN2P
IN2N
IN3P
IN3N
IN4P
IN4N
IN5P
IN5N
IN6P
IN6N
IN7N
IN7P
IN8P
IN8N
TESTP_PACE_OUT1
TESTP_PACE_OUT2
VREFP
VREFN
AVDD
AVDD1
DVDD
AVSS
AVSS1
DGND
WCT
RLDOUT
RLDIN
RLDINV
RLDREF
PWDN
RESET
GPIO4
GPIO3
GPIO2
GPIO1
SCLK
DOUT
DIN
CS
START
DRDY
CLK
CLKSEL
DAISY_IN
VCAP4
VCAP3
VCAP2
RESV1
PaceOut1
PaceOut2
VrefP
TP20
TestPoint
C77
10uF
C79
0.1uF
C80
1uF
C81
1uF
TP24
GNDA
R68
DNP
R70
ECG_RL
R73
392K
C87
0.01uF
J23
R74
10K
R75
10K
TP26
TP27
J24
GPIO_04
GPIO_03
GPIO_02
GPIO_01
SPI_SCLK
SPI_OUT
SPI_DIN
SPI_CS
SPI_START
SPI_DRDY
R71
10K
R72
10K
U22
FNGEP0002
VDD
ED
OUT
GND
R76
10K
J25
Conn_01x03
EXT_CLK
Please verify the footprint
DAISY_IN
C85
1uF
C86
1uF
C83
1uF
C84
1uF
R69
10K
Please verify all VSSA input pins
C62
C69
1uF
C70
0.1uF
10uF
C113
C71
1uF
C72
0.1uF
C114
C73
1uF
C75
0.1uF
C115
C76
1uF
C78
0.1uF
TP21
TP22
Test Points
Analog ECG
This is property of
Emprotek Software Solutions Pvt. Ltd.
Sheet: /AnalogECG/
File: AnalogECG.sch
Title:
Size: A4
Date: 2019-10-02
Rev: 0.1
KiCad E.D.A. kicad 5.0.2-bee76a070ubuntu16.04.1
Id: 8/8