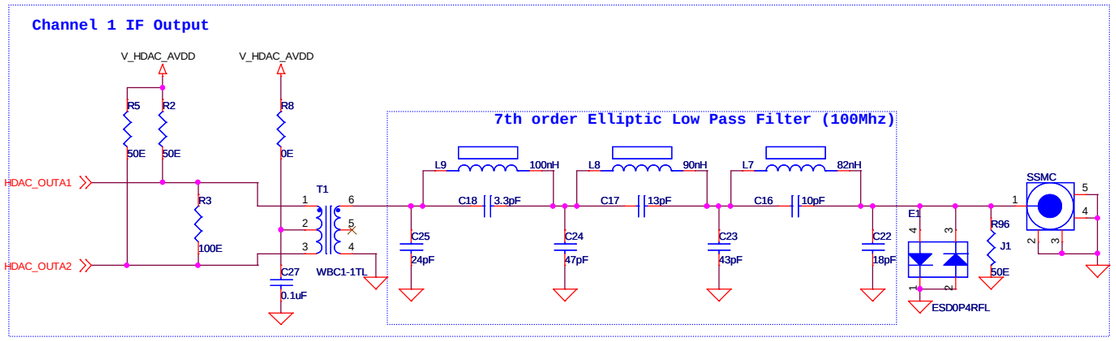
Channel 1 IF Output
V_HDAC_AVDD
V_HDAC_AVDD
R5
R2
50E
50E
R8
0E
HDAC_OUTA1
HDAC_OUTA2
R3
100E
T1
WBC1-1TL
C27
0.1uF
7th order Elliptic Low Pass Filter (100Mhz)
L9
100nH
L8
90nH
L7
82nH
C18
3.3pF
C17
13pF
C16
10pF
C25
24pF
C24
47pF
C23
43pF
C22
18pF
E1
ESD0P4RFL
R96
J1
50E
SSMC

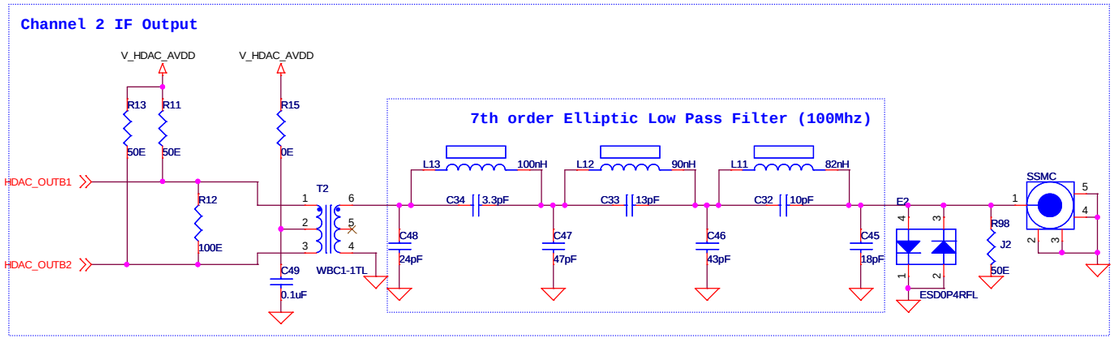
Channel 2 IF Output
V_HDAC_AVDD
V_HDAC_AVDD
R13
R11
50E
50E
R15
0E
HDAC_OUTB1
HDAC_OUTB2
R12
100E
T2
WBC1-1TL
C49
0.1uF
7th order Elliptic Low Pass Filter (100Mhz)
L13
100nH
L12
90nH
L11
82nH
C34
3.3pF
C33
13pF
C32
10pF
C48
24pF
C47
47pF
C46
43pF
C45
18pF
E2
ESD0P4RFL
R98
J2
50E
SSMC

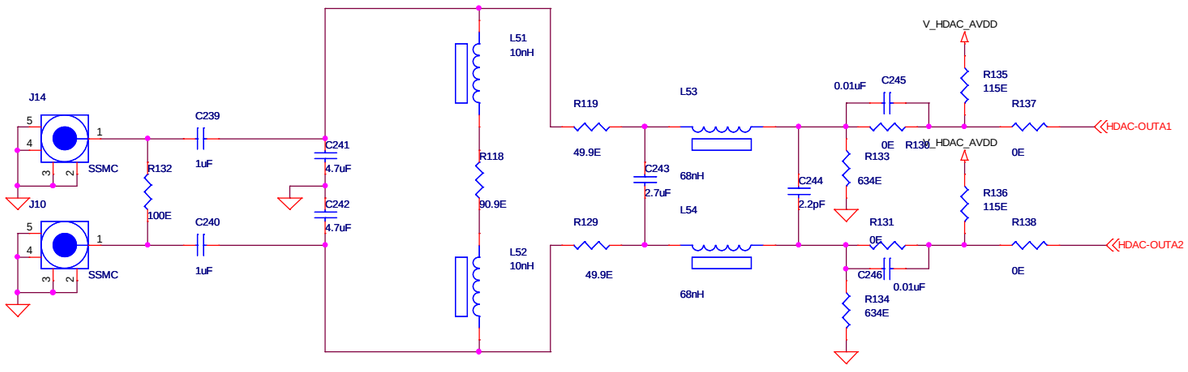
J14
SSMC
J10
SSMC
C239
1uF
C240
1uF
R132
100E
C241
4.7uF
C242
4.7uF
L51
10nH
R118
90.9E
L52
10nH
R119
49.9E
R129
49.9E
L53
68nH
L54
68nH
C243
2.7uF
C244
2.2pF
0.01uF
C245
R133
634E
R131
0E
C246
0.01uF
R134
634E
V_HDAC_AVDD
R135
115E
R136
115E
R137
0E
R138
0E
HDAC-OUTA1
HDAC-OUTA2

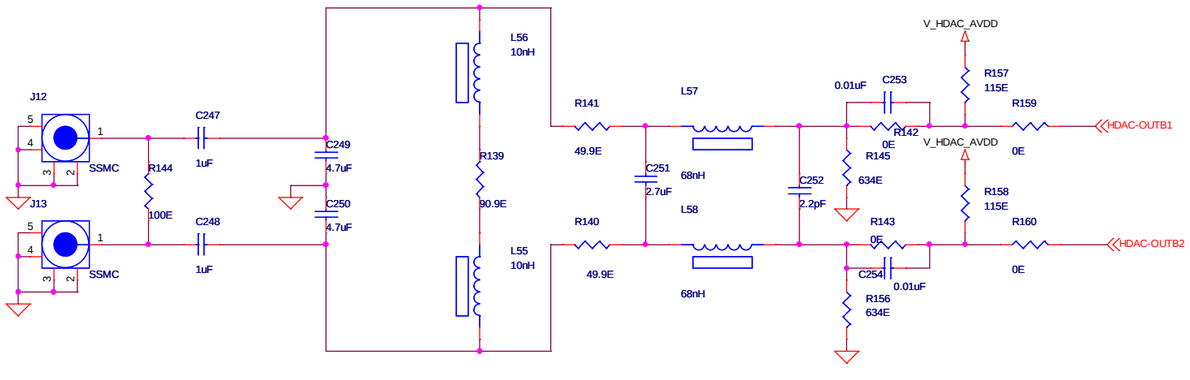
J12
SSMC
J13
SSMC
C247
1uF
C248
1uF
R144
100E
C249
4.7uF
C250
4.7uF
L56
10nH
R139
90.9E
L55
10nH
R141
49.9E
R140
49.9E
L57
68nH
L58
68nH
C251
2.7uF
C252
2.2pF
0.01uF
C253
R145
634E
R143
0E
C254
0.01uF
R156
634E
V_HDAC_AVDD
R157
115E
R158
115E
R159
0E
R160
0E
HDAC-OUTB1
HDAC-OUTB2