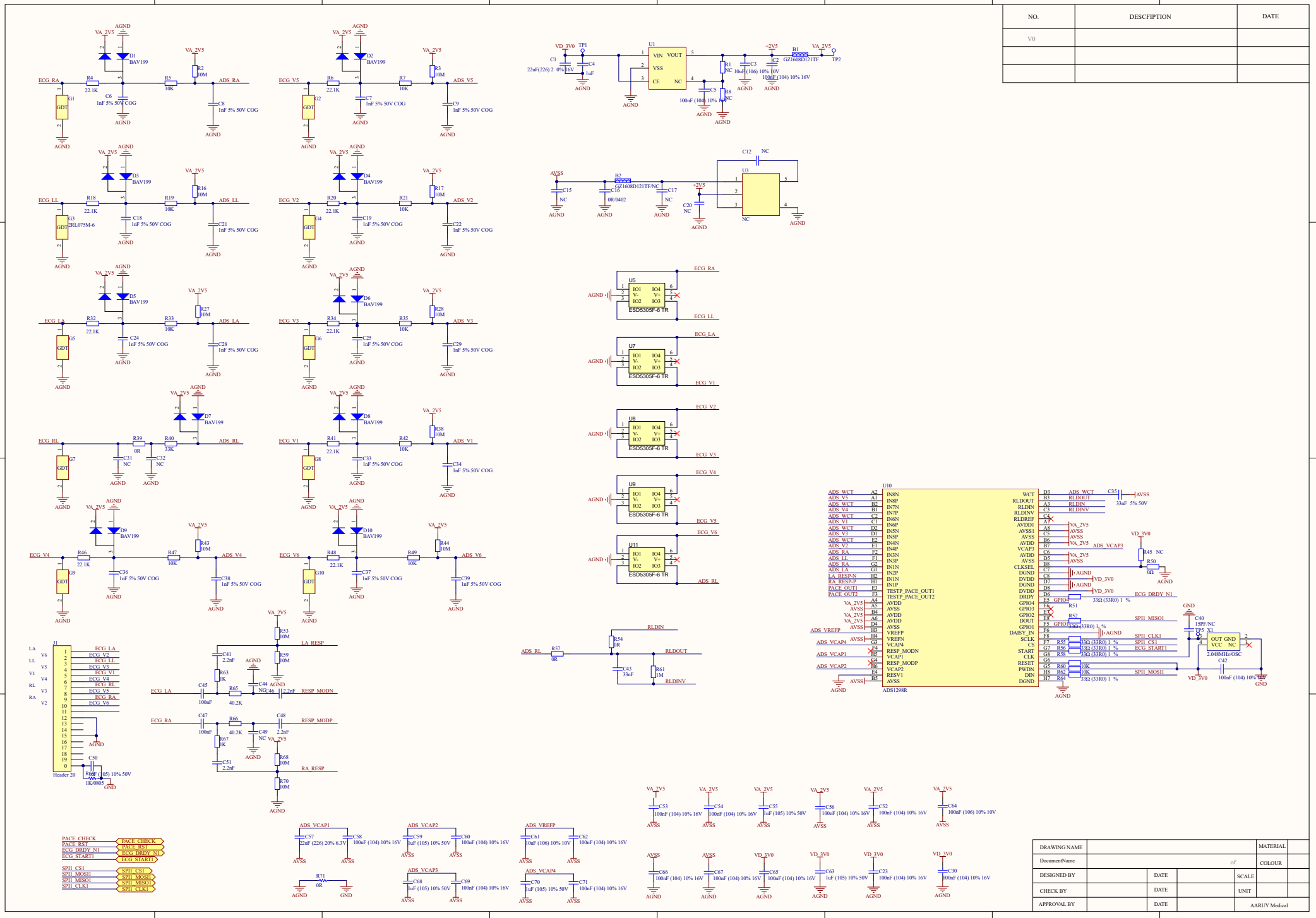
NO.
DESCFIPTION
DATE
V0
ECG_RA
ECG_LL
ECG_LA
ECG_RL
ECG_V1
ECG_V2
ECG_V3
ECG_V4
ECG_V5
ECG_V6
ADS_RA
ADS_LL
ADS_LA
ADS_RL
ADS_V1
ADS_V2
ADS_V3
ADS_V4
ADS_V5
ADS_V6
VA_2V5
AGND
VD_3V0
+2V5
U1
U3
U5
U7
U8
U9
U11
U10
ESD5305F-6 TR
ADS1298R
J1
Header 20
LA_RESP
RA_RESP
RESP_MODN
RESP_MODP
RLDIN
RLDOUT
RLDINV
ADS_VREFP
ADS_VCAP1
ADS_VCAP2
ADS_VCAP3
ADS_VCAP4
SPI1_MISO1
SPI1_MOSI1
SPI1_CS1
SPI1_CLK1
ECG_START1
ECG_DRDY_N1
PACE_CHECK
PACE_RST
GND
X1
2.048MHz/OSC
DRAWING NAME
DocumentName
DESIGNED BY
CHECK BY
APPROVAL BY
DATE
MATERIAL
COLOUR
SCALE
UNIT
AARUY Medical